Project TURTLE

Terrapin Undergraduate Rover for Terrestrial Lunar Exploration

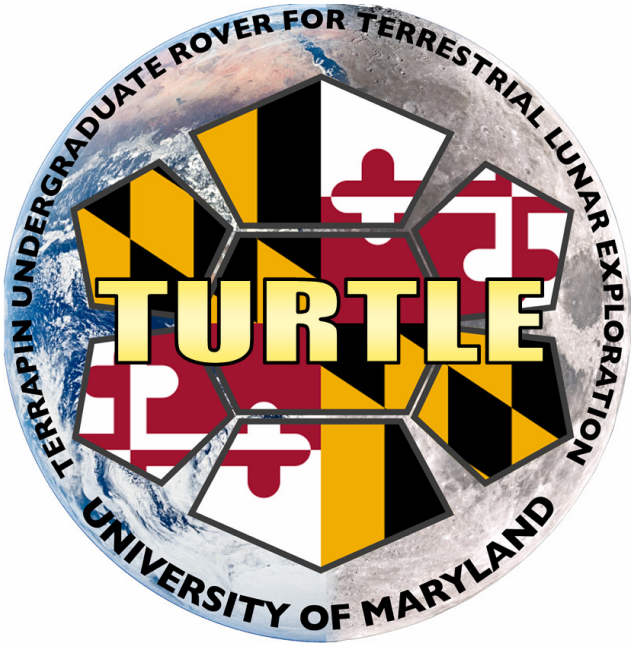

University of Maryland
May 2008

Faculty Advisors: Dr. David Akin and Dr. Mary Bowden

David Berg, James Briscoe, Kanwarpal Chandhok, Enrique Coello, Joshua Colver, Aaron Cox, Stuart Douglas, Andrew Ellsberry, Sara Fields, David Gers, Zohaib Hasnain, Ali Husain, Madeline Kirk, Jason Laing, May Lam, Jason Leggett, Michael Levashov, Ryan Levin, Joseph Lisee, Omar Manning, Thomas Mariano, Jessica Mayerovitch, Brian McCall, David McLaren, Adam Mirvis, Ryan Murphy, Aleksandar Nacev, Hasan Oberoi, Ugonma Onukwubiri, Stephanie Petillo, Tiffany Russell, Matthew Schaffer, Ali-Reza Shishineh, Jacob Zwillinger

I. Overview

A. NASA Constellation Program

THE Constellation program is the current driving force behind NASA's future manned space program. In the quest to return to the moon, NASA is focusing its attention to developing a permanent lunar outpost, and focusing all of its infrastucture at that site. However, many of the scientifically interesting sites will not be within surface access distance from the outpost, and can be reached only via a dedicated sortie-mode exploration mission, currently baselined as four crew for seven days on the surface. The Altair lander used for these sortie missions will be highly mass constrained, and will not allow the transport of a pressurized rover for extended exploration at the sortie site.

The Terrapin Undergraduate Rover for Terrestrial Lunar Exploration (TURTLE) concept is designed to complement and enhance the Constellation program, by exploring the minimum size and mass limits for a pressurized rover while developing a concept of operations that allow the rover to be deployed to the sortie landing site independent of the Altair lander. The TURTLE concept will augment sortie missions on the moon by providing increased exploration range for astronauts. It allows a pair of astronauts to venture up to 25 km away from the lander during a three-day traverse, and supports two such traverses during the sortie mission. This represents a twelve-fold increase in exploration area and duration as compared to an Apollo-style unpressurized rover, without requiring additional Ares V launches; the resultant lunar exploration program is significantly enhanced without impact to the development of the baseline Constellation architecture.

A TURTLE-class small pressurized rover also provides significant benefits during the development and operation of a lunar outpost. During construction, TURTLE can be used as a support station, transporting astronauts around the construction area. Extensive lunar surface extravehicular activities (EVAs) are facilitated by the simple ingress/egress capabilities of the TURTLE suitports, which allow the astronauts to take a quick break for relaxation or nourishment. After the outpost is constructed, TURTLE enhances the mobility of the astronauts. In its outpost configuration, TURTLE can perform an extended mission with twice the range of the sortie rover, and can support two astronauts for six days.

B. Rover Overview

Figure 1 shows the rover and its coordinate system. The cabin pressure shell has an outside diameter of 1.83 m and is 2.43 m long. It consists of two layers of graphite epoxy, wrapped around an aluminum-alloy frame. The rover as a whole is 3.45 m long between the tip of each wheel, 3.24 m wide, and 2.93 m high (to the top of the LIDAR antenna). The total initial mass of the rover, with all consumables but no personnel, is 1750 kg.

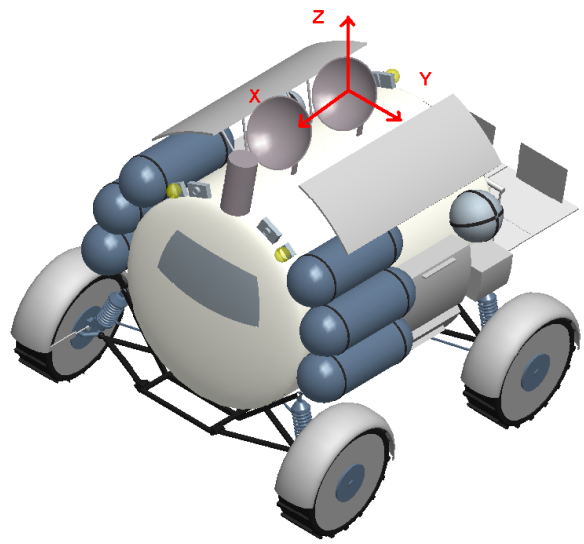

Figure 1. The TURTLE Exterior

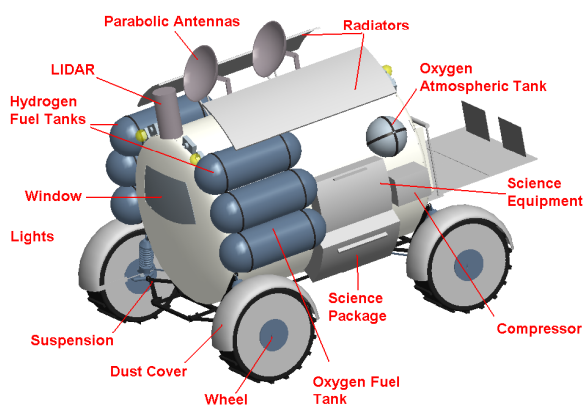

Figure 2. TURTLE Components

Figure 2 shows the external layout of TURTLE, which is designed to meet several constraints. All items are at least 0.5 meters above the ground for the rover to be able to drive over a 0.5 meter obstacle as dictated by requirements. Equipment on the outside cannot interfere with the movement of the wheels. Also all equipment is located where it is secured directly to the chassis instead of the pressure shell, where it cannot be damaged in a driving crash, and does not interfere with the line of sight of the antennas. The science package and equipment are easily accessable by astronauts on EVA. Finally, to maximize the rover's stability while driving,

Table I
STABILITY MARGINS

Tilt Direction	Left	Right	Forward	Backward
Critical Angle	48°	50°	38°	37°

the equipment is placed as low to the ground and as symmetric about the geometric center as possible. Fuel tanks are placed evenly on both sides of the rover to minimize the shift in CG as these are drained.

Ingress and egress for the astronauts are provided by a pair of suitports on the back of the cabin which are accessible via an adjustable external platform, which also provides a control station for driving the vehicle externally during an EVA.

Table I shows the static stability limits for the worst-case situation in each direction. These take into account the change in mass from consumables and the varying positions of the astronauts. The rover is able to traverse a 20 degree slope in any direction in all expected loading configurations with significant margins.

C. Concept of Operations

TURTLE will launch on a Delta IV-H directly into a trans-lunar injection orbit (TLI), with a maximum payload capacity of 10200 kg.[3] By launching directly into TLI, staging in low earth orbit is avoided, which increases the maximum landable mass on the lunar surface. The total time spent in TLI varies from 4-6 days, depending on the mission profile. After completing the lunar transfer stage, the rover will park in a low lunar orbit and initiate descent along a Hohmann transfer ellipse to the surface. At a height of 2000 m, the first stage, a retro engine, will separate from the rover and landing system so that the landing system can land unencumbered on the surface.

1) Payload: The payload carried on the launch vehicle can be divided into two distinct stages. The first stage consists of a retro engine, the Pratt & Whitney Rocketdyne RL10A-4-2, and its associated fuel tanks and structure which are fully supported during launch. TURTLE will be housed in the government version payload shroud (5 m diameter, 19.8 m length) with a 1575-5 payload attachment fitting (PAF) as shown in Figure 3. With the PAF the usable payload mass is reduced to 9780 kg. The RL10A stage will provide most of the landing delta-V, and will be jettisoned at 2000 meters altitude, where a small landing structure surrounding the rover (Figure 4) will perform the final deceleration and landing. Small reaction control thrusters on the RL10A stage will provide attitude control during the transit from Earth, as well as ensuring safe separation from the landing stage and an impact point well removed from the landing site. The rover systems provide guidance, navigation, control, and power throughout cruise and landing.

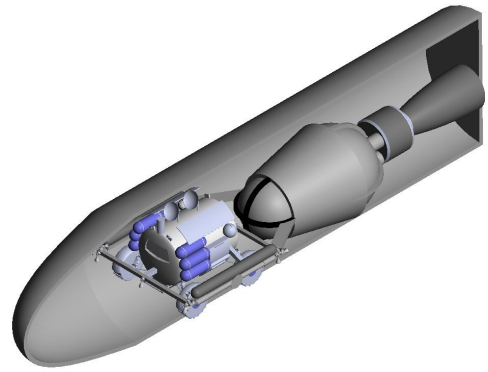

Figure 3. Payload Shroud with TURTLE

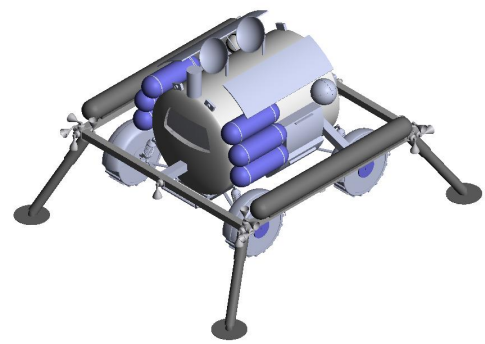

Figure 4. TURTLE Lander with Legs Deployed

2) Landing: The landing stage surrounding the rover will perform the final deceleration while the landing legs deploy. The landing legs consist of three main components: an upper strut, lower strut, and pivoting landing pad. Crushable honeycomb inserts (crush strength of 1.03 MPa) are encased in the upper strut to absorb energy upon impact while the lower strut telescopes into the upper strut. The pivoting landing pad allows adaptability to various terrain and provides greater surface area so the struts do not sink into the soil. Once the thrusters are shut off, the rover and landing structure will drop 1 m to the surface with an impact velocity of 2.2 $\frac{m}{s}$. After settling onto the ground, the legs will detach using pyrotechnic fasteners. The remaining landing structure and the rover will then drop to the ground using TURTLE's suspension to support impact. Since the rover has the capability of driving over a 0.5 m boulder, it will be able to drive over the disconnected landing structure, which will not protrude more than 0.3 m above the ground.

3) Landing Site: Project TURTLE is designed to be integrated into NASA's Constellation architecture, therefore research was done to determine what NASA's

Table II
SCIENCE GOALS FOR CONSIDERED LANDING SITES

Site Name	Science Goals
Gassendi Crater	• Determine relation between auxiliary crater and its parent • Explore ancient lava rilles • Survey crater wall
Tycho Crater	• Determine age of impact crater • Establish accurate lunar chronology
Mare Nectaris	• Test validity of cataclysm hypothesis • Study remnants of Tycho ejecta
Copernicus Crater	• Examine nebulous ejecta ray system • Establish accurate lunar chronology
South Pole-Aitken Basin	• Determine age of impact basin • Find samples of lower crust and lunar mantle • Test validity of cataclysm hypothesis
Schrödinger Crater	• Possible site for lunar outpost • SPA science goals may be accomplished here

science goals are for returning to the Moon. The landing site selection process for TURTLE incorporated many of the suggestions from the National Research Council's 2007 report for NASA's Vision for Space Exploration [14] to make synthesis of the two programs easier. Table II shows a list of higher-priority landing sites that were considered for project TURTLE.

A sample mission outline was also created for Gassendi crater (see Figure 5), to show a concept of a TURTLE mission. Once TURTLE has safely landed on the surface, it will self-checkout and autonomously rendezvous with the astronaut crew, who will land less than 10 km away. Two astronauts will enter TURTLE and use the rover for a three day mission, traveling 25 km away from the crew lander. During the mission, astronauts will perform three EVAs where they will deploy science packages and collect samples. Astronauts will also be able to drive the rover externally during EVA to expand scientific opportunity.

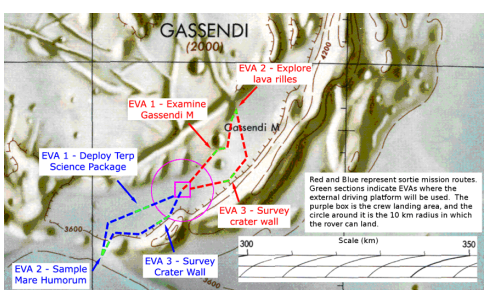

Figure 5. Depiction of a sortie-mode mission using TURTLE

4) Science Objectives: The science objectives of our mission are to:

- Deploy equipment for long-term data collection
- Collect data for the lunar base design
- Increase knowledge of the moon's structure and environment
- Obtain samples for study on Earth
- Perform basic sample analysis on the moon
- Increase understanding of lunar habitability

The science package consists of the Radioisotope Thermoelectric Generator (RTG), Lunar Seismic Monitoring, Lunar Surface Gravimeter, Lunar Atmospheric Composition Experiment, and Lunar Meteorites Experiment. With the RTG to serve as a power source, it will provide power for several years following deployment of the experiments.

D. Requirements

Project TURTLE began with a provided list of 25 Level One requirements. The following list includes the requirements that were highly influential in the design process.

1) The rover shall be capable of launching on an existing lower-cost launch vehicle, and be a stand alone addition to a Constellation sortie mission.
2) The rover shall be capable of autonomously off-loading from the lander.
3) The rover shall be capable of autonomously driving up to 10 km to rendezvous with the crew.
4) The rover shall be capable of supporting a three day mission with two crew members.
5) The rover shall be capable of traveling a 25 km radius from the lander with a total travel distance of 100 km between two sortie missions.
6) The rover shall accommodate crew sized ranging from 95th percentile American male to 5th percentile American female.
7) Rover shall provide life support for nominal mission plus 48 hours contingency.
8) Rover shall support nominal two-person EVAs without cabin depressurization.
9) Access to and from the surface shall be compatible with safe traverses by pressurized subjects in Earth gravity.
10) Rover shall have a maximum operating speed of at least 15 $\frac{km}{hr}$ on level, flat terrain.
11) Rover shall be designed to accommodate a 0.5 m obstacle at minimal velocity and a 0.1 m obstacle at a velocity of 7.5 $\frac{km}{hr}$.
12) Rover shall be designed to accommodate a 20 degree slope in any direction at a speed of at least 5 $\frac{km}{hr}$ with positive static and dynamic margins.

E. Rover Variations

The TURTLE design is based off of the requirements listed above. However, modifications were made to the lunar design to account for other programs or functions. The four rover designs developed are the lunar rover, mock-up rover, outpost rover, and field rover. While the lunar rover and mock-up are parallel designs that

support one another, the outpost and field rovers are supplemental designs based off the lunar design.

a) Lunar Rover: The lunar rover, or flight rover, shown in Figure 1 is the baseline design for the different rover variations and is derived from the level one requirements distributed at the beginning of the project. The lunar rover will be launched to and land on the moon to perform two sortie missions. The lunar rover is designed to survive in the space environment and is entirely self-contained in terms of consumables (i.e. fuel, food, water, air). One of the major defining points is that the lunar rover is a "disposable" rover that is only meant to survive for two three-day sortie missions with a two-day contingency. As such, it is not designed to be refueled or replenished for additional missions.

b) Rover Mock-up: The rover mock-up is a low fidelity mock-up of the lunar rover cabin that was used for design and testing of the interior layout. It was initially derived from the lunar rover designs, but through testing influenced TURTLE's final design. The goal of constructing the mock-up was to allow test subjects to see and feel how the dimensions and placement of interior items influence comfort and ease of use in the cabin. Testing was isolated to console design, interior layout, window size and placement, sleeping options, and suitport operations and functionality. The funds to support the construction of the TURTLE mock-up came from Maryland Space Grant Consortium. As shown in Figure 6, the mock-up has a simple exterior and functional interior for human factors testing and habitability assessments. All testing protocols were approved through the University of Maryland Institutional Review Board for the use of humans as experimental subjects

c) Outpost Rover: Part of the Constellation Program is to develop a lunar outpost to support long-duration missions on the moon. With some modifications, TURTLE can also be used as a support and multi-use rover for the planned outpost. Similar to the original lunar rover, the outpost rover can, as a minimum, go on three-day missions and support a crew of two people. However, upon return, consumables in TURTLE are replenished and damaged parts are serviced. Outpost TURTLE will also have a shirt-sleeve entrance so the rover can dock with the outpost and allow easy access for servicing and replenishing the interior of the vehicle. It is designed for multiple missions and an extended life on the lunar surface.

d) Field Rover: To test the overall concept of a pressurized lunar rover for surface exploration, a high fidelity mock-up of TURTLE was designed to provide a means for Earth testing in a simulated lunar environment. The field rover design is based off the lunar rover with modifications to account for changes on Earth including increased gravity, external atmosphere, and a nearby support team. Unlike the cabin mock-up, the field TURTLE would be capable of supporting a three-day test mission in the desert with two crew members performing EVAs and living in the rover. The field TURTLE also would be capable of independent movement and power generation. Although the hardware would not be flight ready, the field rover is a high fidelity mock-up used to test the overall concept and major systems of the rover.

Figure 6. Rover Mock-up

II. Design

A. Terramechanics

1) Wheels: A major component of TURTLE's design was to determine the ideal number of wheels. TURTLE achieved a positive drawbar pull climbing up a hill or an obstacle with 4 wheels and 8 grousers as shown in Figure 7. The number of wheels and grouser height was analyzed by using Bekker's theory. The wheels are 1.0 m in diameter, to accommodate the Level One requirement of clearing a 0.5 m obstacle. A wheel-width of 0.3 m minimizes the wheel sinkage and power use. The wheels are made out of Aluminum 2024 and have a grouser height of 0.015 m. The hub-rim design protects the motors from impact during driving. The tires are non-pneumatic, airless, and fused onto the wheel. This design improves shock absorbance, lowers energy consumption, and reduces the rolling resistance.

2) Mobility: TURTLE can execute a turn with a maximum turning radius of 9.2 m at a speed of 15 $\frac{km}{hr}$. It will be steered by four linear actuators that will allow the wheels to turn at an 18° steering angle to maintain

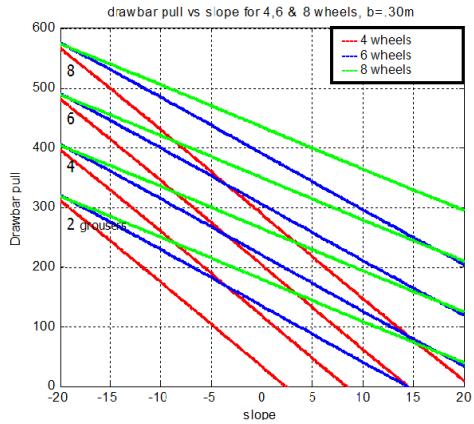

Figure 7. Drawbar Pull VS Slope: Justifaction for 4 wheels and 8 grousers

stability at the maximum speed. The rover can come to a full stop at a maximum distance of 4.34 m in 2.1 s, from a speed of 15 $\frac{km}{hr}$. The stopping distance was determined by the crew sight lines from the driving window. To accommodate the stopping distance, TURTLE uses a two part braking system through a DC drive motor. This includes magnetic and friction brakes, which are made out of titanium carbide due to its high heat tolerance.

3) Motors: The drive system uses DC brushless motors due to their simple nature. It can produce torques of approximately 24 N-m per motor and requires only 10 A of current. The motor is fully encased in a thin (0.1mm) shell of 2024 Aluminum Alloy which will protect it from dust particles kicked up by the wheel system.

The motor itself is mounted along the strut of the vehicular suspension. This section moves upward along with the wheels when obstacles are encountered. The struts bear the weight of the entire vehicular frame, which is an order of magnitude more massive than the propulsion system. A series of miniature struts stabilize the motor, connect to upper elements of the struts without impeding the suspension, and weigh 5 kg each, for a total support system mass of 26 kg.

The motors each extend a 2024 aluminum driveshaft into 5:1 parallel reduction gear train, oriented directly at the center of the wheel and connected to it at the wheel bearings. The length of the drive system allows it to fit entirely within the confines of the wheels of the vehicle, without extending out at any point. The final system design is outlined in TableIII. These motors are a TRL 4 because they have not been space tested.

4) Steering: The rover suspension system allows for individual control of each wheel to rotate a maximum angle of 60°. To apply the torque to each wheel forcing turning, a linear actuator is attached to the wheel base and the suspension system.

a) Calculation of Force Required: When calculating the required force the linear actuator needs to apply to generate the torque on the wheel, a turning time of 60° in 1 second was assumed. This time is the assumed response time of the wheel itself and does not include the response and speed of the linear actuator. The assumption is made that the linear actuator used will be able to respond at similar rates, if not faster. The relationship between the force required by the linear actuator when turning the wheel a certain angle was determined. For a 60° turn, 450 N must be applied to each wheel.

b) Calculation of Energy Needed: After determining the required force the linear actuator needs to exert to turn the wheel, the energy required to supply to the linear actuator was calculated. The energy required is related to the distance the actuator moves. This energy can then be converted into a power draw for each wheel actuator by averaging it over the time required to turn creating a relationship between the power draw and the turning angle. The highest power draw of 100 W per wheel was added into the power budget.

5) Suspension System: The rover has an independent suspension because it has four independently steered and powered wheels. Each wheel is connected to the rest of the rover with a MacPherson strut. The suspension system is designed to handle two loading cases: driving over a 0.1 meter obstacle at a velocity of 7.5 $\frac{km}{hr}$ during driving, and landing at up to 1 $\frac{m}{s}$. Based on analysis of a linear system of differential equations, a spring constant of 35 $\frac{kN}{m}$ and damping constant 1 $\frac{kNs}{m}$ were chosen for the suspension at each wheel.

B. Structures

Every structure in the rover is designed to have a margin of safety greater than zero against its most extreme loading case. For ease of fabrication and handling, metallic components are required to have a minimum thickness of 1 mm. Composites and sandwich structures must have a minimum thickness of 2 mm and 12 mm, respectively.

1) Chassis: The chassis frame is shown in Figure 8. All equipment mounted to the exterior of the rover is attached directly to the chassis frame. Four circular rings wrap around the rover's inner pressure shell which are connected by seven struts running the length of the rover, to absorb axial forces during launch. Additional struts are added in the rear of the structure to support the suitports. Shock towers are located at the front and back end of the chassis to absorb impact loads from the wheels.

Three load cases were considered to be major scenarios during the operation of the rover: launch, landing, and hitting a rock with one wheel while driving. The launch load case applies inertial loads at 6gs axially and 2gs

Table III
SYSTEM DESIGN CHARACTERISTICS

Performance Ratings		**Critical Ratings**	
Nominal Motor Torque	26 N-m	Average Power Draw	0.821 kW
Max Motor RPM	540 rpm	Maximum Power Draw	6.19 kW
Max Torque per motor	62 N-m	Acceleration	0.230 m/s2
Efficiency	0.91	Average Waste Heat	48.6 W
Total Mass	**171.3kg**	**Total Length**	**0.22 m**

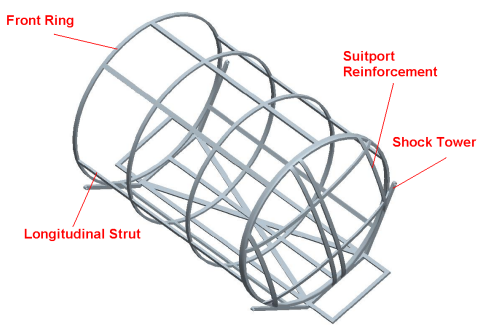

Figure 8. Chassis

laterally. The landing load case creates an impact force of 6.9 kN applied to the bottom section of the chassis at the lander attachment points. The rock collision load case applies an impact force to the front of the rover on the right side of the shock tower where the suspension is connected.

During launch, the rover is standing on its back end. The resulting inertial forces on the frame are shown in Figure 9. Because of this configuration, it will experience large axial loads during launch.

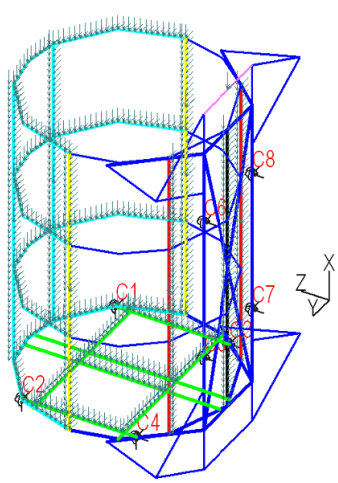

Figure 9. Forces on Chassis During Launch

A structural analysis software program called Visual Analysis was used to determine the internal axial force, shear force, bending moment, and torsion in each member of the chassis, for each individual loading case. The critical loads were then determined by finding the highest internal force created in each member out of the three possible load scenarios.

The determined critical loads were used to size all 90 chassis members. Aluminum alloy 6061-T6 (TRL 9) is used as the material for the chassis, due to its high strength-to-weight ratio. A safety factor of 1.4 is used, in accordance with NASA-STD-5001.[13] All pieces are sized as hollow, circular members to withstand normal stress, shear stress, and buckling due to compressive forces under all loading cases. These pieces have a positive margin of safety of at least fifteen percent. Using these design considerations, a mass estimate of 163 kg is obtained for the flight rover chassis.

2) Cabin:

a) Pressure Shell: The cylindrical pressure shell separates the astronauts from the harsh lunar environment. It is 2.43 m long and 1.83 m in diameter. Graphite epoxy T300/934 is used as the material for its high strength-to-weight ratio and temperature resistance. The material is TRL 9, because it has previously used in space hardware. A safety factor of 3 is required for manned pressure vessels.

Driving loads were determined as the limiting load on the cylindrical section due to a combination of internal pressure, thermal stresses, and obstacle induced stresses. Classic laminate plate theory was used to determine the stresses based on all three load situations. Stresses were also analyzed with finite element modelling using COMSOL Multiphysics. An 8.4 mm thickness was required to resist the resulting stresses, resulting in shell mass of 177 kg. The stress under driving conditions is shown in Figure 10.

The endcaps experience higher stresses from the internal pressure and must be reinforced. A semi-elliptical shape extending 0.325 m in front of the cylinder is used to minimize mass. Thermal loads and stress concentration factors due to the window in the front cap and the suitports in the rear require the thickness to be increased to 10 mm in this region. The front endcap experiences 190 MPa stress and has 5% margin of safety; the rear cap has a max 198 MPa stress and 1% margin of safety. The stress distribution for the rear endcap is shown in Figure 11; the highest stresses are in the knuckle region

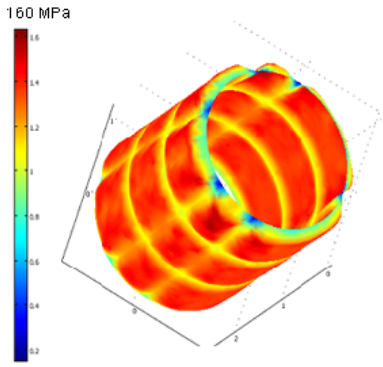

Figure 10. Pressure and Driving Loads on Cabin

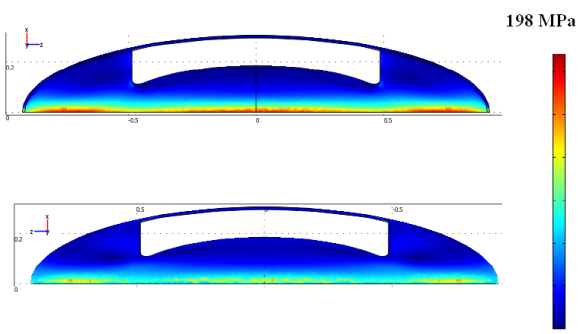

Figure 11. Stress Analysis of Rear Endcap

where the semi-elliptical cap is attached to the cylinder. The combined mass of both endcaps is 69 kg.

The shell must also protect against micrometeroid strikes. The flux is calculated using a total surface area of 18.12 m^2 (the area of the shell, without the suitports and window). Over a ten day mission 0.001 hits are allowed. This results in a flux of $2.0 \times 10^{-3} \frac{hits}{m^2 \times year}$, corresponding to a 2.0 mm particle size for the lunar meteoroid flux model.[1] Particles are assumed to be of mass density 1.5 $\frac{g}{cm^3}$, traveling at 30 $\frac{km}{s}$ perpendicular to the shell surface. A single-layered shell of graphite epoxy would require uniform thickness of 14 mm to resist this impact.[11] It is more economical to use a second layer of graphite epoxy. The new layer is 2 mm thick (to conform with fabrication requirements), outside of the inner shell, and adds 45 kg to the mass of the system.

b) Cabin Floor: The floor inside the cabin is grated fiberglass (resistant to fire, corrosion, and impact) and contains eight equal sized panels, each 57.4 cm x 61 cm wide and 2.54 cm thick. The panels run the entire length of the rover and sit at a level and uniform height, with the center of the floor 20 cm above the lowest point in the pressure shell. A uniform support runs the length of the rover on each side of the floor where it meets the rover. Extra cylindrical supports reinforce the center of the floor. At a maximum lunar weight of 360 N, each panel will only deflect 0.1 mm. The total mass of the floor is 33 kg.

c) Window: The driving window is 1.09 m wide and 0.51 m high, providing a minimum field of view of 45° to the left and right, 20° down, and 5° up for all drivers within the size range specified by the level one requirements.

The window consist of two panes. The outer pane, constructed of fused silica glass, resists temperatures up to 1175 K. It is 13 mm thick, for micrometeroid protection against a particle of 2 mm diameter.[4] On the inside surface of this windowpane is an anti-reflective coating of layered silica, providing optimal visible light transfer through the window.[5] The inner pane, constructed of aluminosilicate glass, is used as a low expansion pressure pane. It is 20 mm thick, providing 0.1 mm deflection at 100 kPa. The outside surface of the inner pane is coated with infrared reflection coating, to reduce heat transfer. The materials listed above have been used in the space shuttle, making them a TRL 5.

The window frame is constructed of Vitreloy, an amorphous metal which molds to the shape of the shell. The Vitreloy frame can be forged without welding to a perfect fit, thus securing the cabin and crew. Viton fluoroelastomer seals are used to seal the pressurized cabin at the window connection points within the frame and shell. Vitreloy has been used in some space applications, resulting in a TRL 8. However, since it has never been used in window applications, the readiness of the entire window system is a TRL 4

Dust control is necessary to keep the lunar surface visible for the astronauts. A brush to wipe windows will be kept in storage in the exterior of the rover.

3) External Platform: The external platform at the rear of the rover provides the astronauts with access to the lunar surface once they have entered the space suits through the suitports. It is 2 m wide and 1.2 m long, with a mass of 35 kg. The platform is split into two sections which can operate independently in the event of a partial failure.

The platform folds into three different configurations. In the normal configuration (visible at the rear of the rover, in Figure 2), the platform extends horizontally to support the suits while astronauts drive the rover from the inside. It can also fold into a configuration that allows the astronauts to sit on the platform and drive the rover from the rear using the external driving controls (Figure 12). Finally, the platform can fold straight up to be compact during launch.

C. Crew Systems

Because the rover is designed as a sortie rover for manned missions, crew integration is essential to the

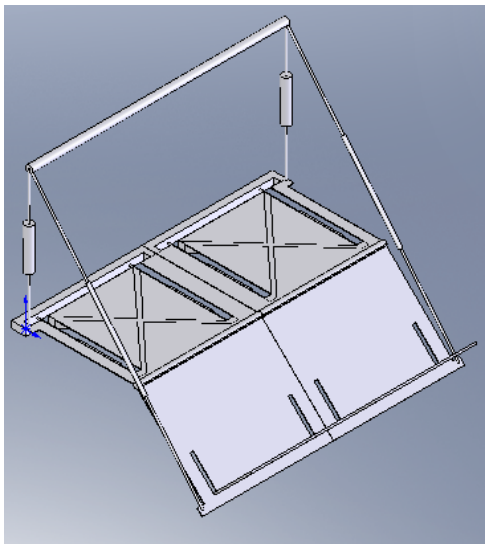

Figure 12. External Platform in Driving Configuration

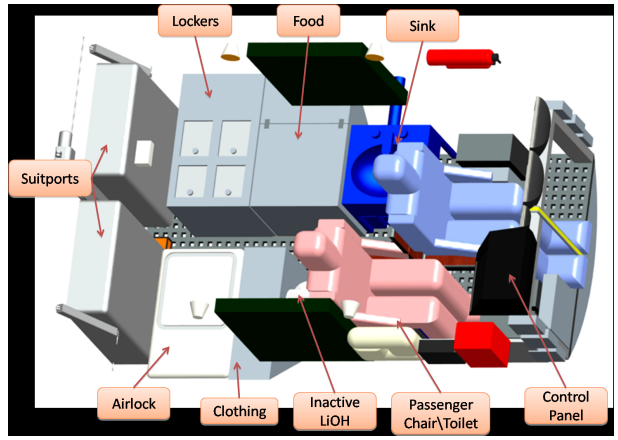

Figure 13. Cabin Interior Layout

success of the TURTLE program. The physical configuration of the rover interior has been designed for efficient use of the available space while maintaining crew comfort. In addition, life support systems ensure that the crew will be able to carry out their mission safely.

1) Interior Layout: During the development of the rover, a number of cabin configurations were presented. All layouts had the same goals in mind: that the cabin physically accommodate all possible crew members (5th percentile American female to 95th percentile American male), provide a safe and organized environment for the crew, and be reconfigurable for maximum space usage. Testing was carried out to determine which of two final designs would be designed to completion and what changes should be made to improve these designs.

A diameter of 1.83 meters and length of 2.43 meters was chosen for the pressurized cabin, allowing crew members ample headroom when seated and the ability to stretch out fully when sleeping. Using the rover mock-up, test subjects determined that a centered driver's seat is ideal primarily because it provides a symmetric field of view, as long as the driver seat could be adjustable to allow for better cabin accessibility. Test subjects also found that a cot-style bed was comfortable and easy to deploy. The final cabin configuration is shown in Figure 13.

A reconfigurable cabin was a top priority during the design process. The toilet is stored under the passenger seat cushion, which flips up when necessary. A lightweight curtain can be deployed to provide necessary privacy. When the crew needs rest, the driver and passenger seats lay flat and beds, folded and stowed during waking hours, are placed on the flat surfaces created by the seats, storage compartments, and sanitation equipment.

2) Suitports: A reconfigurable cabin is essential for volume and mass efficiency, and suitports are vital to streamlining and simplifying the ingress/egress process and mechanisms. A suitport is much smaller than an airlock system both in terms of mass (145 kg vs. ISS's 6064 kg) and volume (.25 m^3 vs. ISS's 34 m^3).[8] In addition, while a traditional hinged door would use approximately 2 cubic meters, the mechanism used in TURTLE allows for "garage-door" style movement, occupying less than 0.5 cubic meters. A number of seals need to be employed correctly in order for the suitport to work properly: between the suitport structure and the cabin shell, between the suit and the suitport, between the suitport and the PLSS containment system (PCS), between the PLSS and the PCS, and finally between the suit and the PLSS. In general, passive mechanisms are preferred for these interfaces, and redundancy is critical. To anticipate developing spacesuit technology, the suitports on TURTLE have been designed for the I-Suit in development at ILC Dover. However, similar suitports could be designed for any suit in common use.[6] Currently, suitports are at a TRL of 2.

3) Life Support: Life support systems were designed in order to support a two person crew for a pair of 3 day sorties. The partial pressure of nitrogen is 33.9 kPa (4.92 psi). This results in an oxygen concentration of 34%, near the 30% concentration recommended by NASA.[12] The resultant R-factor is 1.14. The total atmospheric pressure is 55.2 kPa (8.0 psi), identical to the atmospheric pressure selected by NASA for the Altair lander as part of the Constellation infrastructure. Disposable LiOH filtration (TRL 9) will be used to remove CO_2 from the cabin, and particulate filters will

remove any particles smaller than 0.5 μm.

Radiation protection provided a challenge in the design process. To provide the crew with some protection from galactic cosmic radiation, potable water is stored above the astronauts in an inch-thick tank conformed to the curvature of the cabin. This 2.5 $\frac{g}{cm^2}$ areal density reduces the radiation absorption to well within career limits [2]. Solar particle events (SPEs), however, require more drastic protection measures. In the event of an SPE, the crew will receive a warning from mission control, and will then seek shelter either by digging in under the rover itself or by hiding behind lunar landforms, such as boulders or crater ridges.

In terms of nutrition, a hydration level of 9% is optimal and results in a mass savings of 33 kg, as compared to fully hydrated food. The nutrient profile for the sortie mission was constructed using the World Health Organization's recommendations for a 95th percentile male with a high physical activity level (PAL).[9]

D. Avionics

1) Command & Data Handling: The Command and Data Handling system connects together every device in the rover that needs to transmit data or to be controlled by the computer. It needs to be fast enough to transmit HDTV video, and deterministic enough to carry the sensors data and vehicle commands for real time control during driving and landing.

The system consists of an AFDX network, TRL 4, which connects the rover's three main computers, sensors and distributed computation units (DCU). AFDX is a real time network standard currently used in next generation commercial aircraft like the Airbus A380 and Boeing 787, and it is being considered for use in space by NASA. The DCUs are small AFDX linked, FPGA powered computers which are located next to critical systems, and run low level control loops.

2) Crew Interfaces:

a) Interior Crew Interfaces: The crew's primary interface with the rover is from the chairs at the front of the cabin. Three 36 cm Honeywell DU-1310 touchscreen LCD displays, TRL 4, are used. These displays are mounted in the front instrument panel: one directly in front of the driver, the other to his left, and the third set back and in front of the passenger. The displays act both as the primary source of information and input device for the crew. The other main source of input is a 2-DOF joystick. The joystick allows the crew to control the rover's steering and speed.

The secondary interfaces for the crew are provided by switches and an emergency display and input system. The switches provide instant access to critical rover functions during emergencies. The emergency display and input system consists of a caution and warning panel and a basic screen and input device which can read data and send commands to the rover's other internal systems. This system can operate even when all main computers have failed.

b) Exterior Driving Station: The astronauts have a secondary driving position on the outside of the rover, collocated with the suitports, that allows them to drive without reentering the pressurized cabin. This provides a similar capability to the Apollo LRV and the proposed Constellation unpressurized rovers for extending EVA range. The astronauts will use the external driving station to access the full range of the rovers systems and provide the same capabilities as driving from the interior of the rover.

The exterior display is the same basic DU-1310 monitor as used on the interior of the rover. The main differences are the vertical orientation, which increases visibility, and its enclosure, which protects it from the lunar environment. The driving station includes a similar 2-DOF joystick hand controller to the one located inside the rover, but it is protected from the lunar dust as well as optimized for use while wearing a pressure glove.

3) Navigation & Autonomy: TURTLE's avionics system provides both autonomous driving and position determination capabilities. Its autonomy system allows it to land uncrewed and drive without assistance to a lander or outpost where the crew awaits. The position determination system makes the autonomy system possible as well as allowing astronauts to find all their objectives on their planned routes.

The position determination system begins with an initial satellite based position fix. It then uses an odometry system to create an estimated position as the rover drives. Since the odometry based position drifts over time the rover uses its onboard scanning light detection and ranging (LIDAR), TRL 4, sensors to create a local map of the terrain. This map is then used to look up the rover's actual position in an onboard map and correct the vehicle's position estimate. The scanning LIDAR sensors are also used to build an obstacle map of the surrounding terrain so the autonomy system can navigate around obstacles.

4) Communications: TURTLE will be a component of a much larger sortie or outpost mission that will include many other Constellation systems, including the Orion CEV, Altair lander, space suits and lunar relay satellites that all need to function together. As a secondary system, the TURTLE rover is designed to communicate with all the existing systems.

Based especially on the Constellation requirements, S and Ka bands were selected to meet the low and high speed communications requirements. The S-band link allows communication with a large number of systems including all Constellation systems, the Space

Network (TDRSS) for launch and transit, the Deep Space Network, and the planned lunar relay satellites.

The rover has two 53 cm high gain antennas (HGA) and a single omni antenna. The antennas are connected to three identical S-band transceivers for redundancy. The two HGA antennas are connected to the two KA-band tranceivers. The S-band system provides 20 Mbps of bandwidth, while the Ka-band system provides 150 Mbps, enough for a live HDTV video uplink.

E. Power System

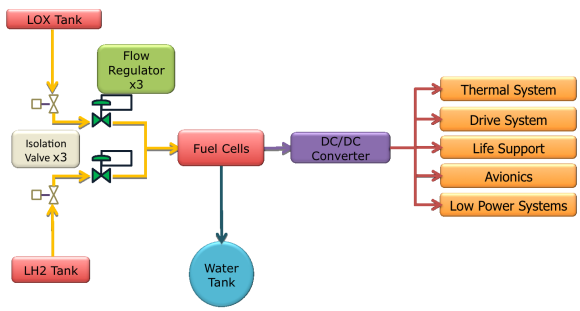

Figure 14. Overview of Power System

The overall power system designed for TURTLE is simple, yet effective. The primary power supply is the array of three Proton Exchange Membrane (PEM) fuel cells contained on the outside of the rover. Any single fuel cell can supply enough power to the rover for the duration of the mission, but tri-fold redundancy of this system has been included as fault tolerance because it is vital to the survival of the crew. Due to this redundancy, it is imperative that the fuel cells are low in mass. At any given time, at least two fuel cells will be active to safeguard against a complete power shutdown in the unlikely event that one fuel cell fails. There are current PEM fuels in existance with a low mass of 13 kg each though they must be modified to utilize liquid oxygen (LOX). This gives the fuel cells for the rover a TRL 3.

1) Power Requirements: The power needed to supply the rover over the duration of a lunar mission is divided into five stages, as seen in Table IV. Fuel cells were selected as the power supply to optimize power generation, mass, power density, and supply duration requirements. During each stage of the mission there are different components running on the rover. This causes a wide variation in the amount of power that needs to be supplied. It is therefore more efficient and accurate to separate the power requirements for each stage of the mission between the Earth and Moon, rather than average the power over the entire mission.

2) Fuel Cells: The fuel cells are supplied with cryogenic reactants of liquid hydrogen (LH2) and LOX stored in carbon fiber composite tanks (TRL 4) on the outside of the rover. This fuel cell system will supply power throughout the lunar mission (13.2 kW at 300 A and 48 V, though the voltage will be limited to 28 V for most rover systems). A system efficiency of 60% for the fuel cells is used in this case. In addition, when the reactants flow into the fuel cells and react, potable water is produced and stored for use by the astronauts throughout the mission.

To achieve the proper voltage supply from the fuel cells, a DC/DC converter is connected between the fuel cells and the rover systems. To determine the amount of LH2 and LOX needed to react and provide power to the rover, the total energy required for each stage of the mission was determined by finding the average power per stage and providing that power for the duration of each stage.

3) Reactants, Boil-Off and Tanks: Due to warming from the sun, boil-off effects on the cryogenic reactants will cause a certain percentage of the reactants to vaporize and become unusable. As such, a certain percentage of extra reactants must be added to the system along with Multi-Layer Insulation (MLI), TRL 9, covering the reactant tanks to decrease the absorption of energy from sunlight. Additionally, the size of the reactant tanks affects the boil-off. As tank size decreases, boil-off decreases because less tank surface area is exposed.

To provide the necessary mass (and volume) of reactants to account for both rover power and boil-off effects (32.9 kg LH2 and 243.0 kg LOX) while maintaining the minimum number of carbon fiber composite tanks, four tanks of LH2 with a diameter of 50.0 cm each and two tanks of LOX with a diameter of 46.4 cm each were selected. All tanks have a thickness of 3.0 mm and length of 82.0 cm. To prevent boil-off, each LH2 tank is wrapped in two layers of MLI and carries 10.8% extra reactant, and each LOX tank is wrapped in one layer of MLI and carries 2.9% extra reactant. The percentages of extra reactants result from filling the tanks to prevent boil-off before the fuel cells are turned on.

F. Thermal

1) Overview: The thermal control system used on the lunar rover involves both active and passive methods. The passive methods include Aeroglaze A276 white paint (TRL 9) on all possible surfaces and multilayered insulation (MLI) covering the fuel tanks. The active techniques include a helium gas heat exchange system (TRL 4). This system is necessary because the equilibrium temperature experienced inside the rover is approximately 330 K. This high temperature is due to solar radiation, lunar soil radiating heat, and internal heat production.

Table IV
MISSION STAGING POWER AND ENERGY DISTRIBUTION

	Avg. Power Req'd. (W)	Stage Length (hrs)	Energy Req'd. (kWhr)
Transfer Stage	**290**	**167**	**48.430**
Descent & Landing Stage #1	**1328**	**0.917**	**1.217**
Descent & Landing Stage #2	**1068**	**0.083**	**0.089**
Standby Stage	**426**	**216**	**92.016**
Sortie Mission Stage	**3240.4**	**192**	**622.157**
Total	**—**	**576**	**763.909**

The heat loads inside the rover that must be controlled average 813 Watts. This power output comes from the internal components that receive power. Since efficiencies are not known on all internal components, the heat production is assumed to be the power that is supplied to the components. In addition to the internal heat loads inside the rover, the heat produced from the fuel cells must be removed. This heat is related to the assumed efficiency of the fuel cells.

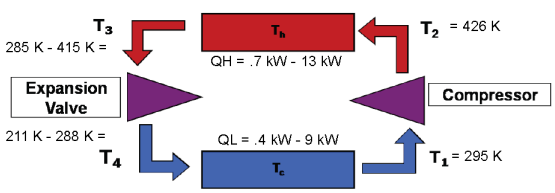

Figure 15. Active Heat Transfer System Environment

2) Heat Transfer System: The heat exchange system uses a working fluid of helium gas. This gas absorbs heat in the interior components until it becomes the cabin temperature of 295 K. It is then compressed and sent through a radiator where the heat is expelled into the environment through radiative heat flux. It is important to note that the work from the compressor has to be determined and included in the equilibrium temperature for the radiator. This forces the solution method to be an iterative process. In addition, a pressure ratio was chosen that would help to maximize the efficiency of the system without requiring unreasonable mass flow rates. The efficiency of this heat engine is 2.2 over the heat expulsion ranges necessary.

3) External Radiator: The external radiator design was chosen specifically to maximize the area of radiation for a given planar area size of 8 m^2. A corrugated aluminum radiator design was chosen, with equilateral right triangles as the cross-sectional shape. The thickness and height of these triangles was then determined from the mass flow rates and heat flux terms solved for in the general thermal system.

4) Internal Heat Exchanger: The internal radiator design consists of tubing through which the cold helium gas will flow through and cabin air will circulate over depositing heat. The required length of 21 m and a diameter of 1 cm for the pipes was determined by using the film heat transfer coefficient of the moving fluid while mass was minimized in the process. This tube length can then be folded into a zig-zag pattern for space saving goals.

G. Conclusion

1) Critical TRLs: The TURTLE program relies on a number of systems and techniques that are currently in the early stages of development. In order to carry out the mission on schedule, those systems must be given development priority over all other systems. Funding and labor must be allocated such that these systems do not lead to delays in the deployment of the rover. There are currently 6 systems that are at a dangerously low technology readiness level (TRL 1-3): suitport components, the suit designed in concert with the TURTLE suitport, lander legs, lander detachment mechanisms, and the fuel cells. In addition, there are several systems at moderate TRL levels 4-6. These systems include TURTLE's science package, flooring, a number of the propulsion systems, and various avionics systems. By properly testing and qualifying these systems, TURTLE can be ready for launch on schedule.

2) Reliability: The reliability analysis for TURTLE focused on two primary events, Loss of Mission (LOM) and Loss of Crew (LOC). Loss of Mission entails a failure that causes the astronauts to abandon the mission, but does not result in any crew casualties. LOM only considers events after the crew rendezvous with TURTLE. Loss of Crew results in at least one crew fatality. Based on the information available and significant uncertainty in component reliability figures, only critical parts were considered in the analysis. Sub-components would only add significant error to the already uncertain results. In addition, all failure events are treated as independent occurrences.

At the present stage of development, there is a 1.4% chance of Loss of Mission and a 0.4% chance of Loss of Crew during one sortie. According to NASA, a mission of this nature must have a 99.9% crew survivability rate. Although the current design iteration does not meet NASA's standards, reliability can be improved with further development.

3) Program Schedule: The primary goal of the TURTLE program is a successful sortie mission in 2020. In order to achieve this goal, a number of milestones must be achieved first. First, systems that are at a moderate TRL, as listed above, are expected to be flight ready within the next 2 to 3 years. Second, systems at TRL 1-3 must receive full attention as soon as possible. With full funding and labor allocation assumed to be devoted at the time of this publication, it is assumed that these systems would be flight ready within the next 6 to 8 years. This means that the systems associated with the TURTLE project would be ready for launch by 2016. Once this point is reached, systems integration can be finalized and astronauts can begin learning to use the systems properly. With approximately 4 years of training, the crew will be ready for a successful mission in 2020.

4) Cost Analysis: Costs for TURTLE can be divided into two distinct types: non-recurring and recurring costs. Non-recurring costs are associated with design, development, testing and evaluation (DDT&E), and the construction of facilities. Recurring costs are associated with the construction of the vehicle, mission planning and operations as well as launch costs that are present throughout the life of the program.

A number of assumptions were made regarding the development of the TURTLE program. The first assumption is that there is no DDT&E on the launch vehicle, as an existing EELV will be used in order to meet level one requirements. Thus there is no associated non-recurring costs in the production of the launch vehicle. The second assumption is that the initial flight will take place in 2020. This is concurrent with NASA's planned return to the moon. The third assumption is that there is an 85 percent learning curve on the construction of the rover. Fourth, the assumed program length is ten missions for the purpose of life-cycle cost estimates. Finally, there are three components that can easily be broken down by mass to estimate their costs: the lander, the trans lunar stage, and the rover.

All of the cost models used to develop the cost estimates of each system found the value in 2005 dollars. Using an inflation calculator [7] recommended by NASA, all models were adjusted to account for inflation rates and are in 2008 dollars. The non-recurring costs of each of the required pieces was found using the NASA Advanced Mission Cost Estimator. This estimator was combined with the NASA Spacecraft/Vehicle Level Cost Estimator to help get a more accurate idea of the costs since this is a fairly unique program.

These models use the costing heuristic of

$$C(\$M) = a\left[m_i(kg)\right]^b, \tag{1}$$

where C is the cost in millions of dollars, m is the mass of the part in kilograms, and a and b are adjustable factors.[10] The mass does not include fuel, science packages or consumables. Using the costs found from NASA's cost models, the values for a and b were found. Tables V and VI below detail the cost for each system in development.

Table V
NON-RECURRING COST VARIABLES

System	m (kg)	a	b	Cost ($M)
Rover	2161	22.96	.55	1600
Trans Lunar Stage	1470	15.35	.55	850
Lander	510	8.99	.55	280
Science Packages	116	2.29	.50	25

Table VI
RECURRING COST VARIABLES

System	m (kg)	a	b	Cost($M)
Rover	2161	.71	.662	120
Trans Lunar Stage	1470	1.11	.662	140
Lander	510	.58	.662	36
Science Packages	116	.39	.7	11

The total cost of the program is the non-recurring plus recurring plus the launch vehicle costs. These costs are all listed in Table VII.

Table VII
TOTAL COST OF PROGRAM ($M)

System	Non-Recurring	Recurring	Total
Rover	1600	850	2450
Trans Lunar Stage	850	990	1840
Lander	280	250	530
Science Packages	25	78	103
Delta-IV	-	2500	2500
Total	2800	4700	7400

In addition, because this project is rated at a cost readiness level of 4, this estimate is very preliminary. The cost calculated above is within 45% of actual costs. Thus the true cost of the program can be estimated to be within the bounds of 4.7 billion dollars to 11 billion dollars.

III. OUTPOST ROVER

A. Outpost Overview

NASA's Constellation program involves the establishment of a lunar outpost. The lunar base is part of a long-term plan for missions to Mars, and experimentation of lunar elements where mission lengths will gradually increase over time. The current design plans by NASA start with short four to seven day missions, then gradually increase from two weeks, to two months, and ultimately to 6-month missions. The initial seven-day sortie missions will be focused on scientific experimentation, lunar

terrain examination, and lunar outpost site selection. The outpost missions will have a crew of four astronauts.

Currently, the lunar South Pole serves as a potential lunar outpost site. It is high in hydrogen content, has ample sunlight for power generation, and the diurnal temperatures are less extreme than other sites. Peary Crater, Malapert Crater and the Shackelton Crater are other sites that are also being considered by NASA.

The components of the lunar outpost would be sent in a separate cargo landers with an incremental buildup plan for construction so that the astronauts can establish the outpost in multiple short, consecutive missions to the moon. Once the lunar outpost is established and fully functional, the manned missions would increase in duration. To be a useful tool in the outpost missions, some parts of TURTLE needed to be redesigned to address the longevity of the missions for the outpost. The outpost rover must be reusable, serviceable, and mate with the outpost.

Connecting the rover with the outpost to transfer items and people needs to be addressed by understanding the current lunar base designs. Inflatable technology, as well as rigid formats, are being refined to study and analyze the best solution for the lunar base that is cost effective, easy to deploy, and weight effective. Johnson Space Center is currently developing lunar habitation modules for the outposts that are inflatable, light, and robust. The current lunar habitation modules use an airlock for ingress and egress. However, incorporating a docking system would allow astronauts a shirtsleeve transfer from the outpost to a pressurized rover and vice versa.

B. Changes From Flight

The outpost rover is designed to be a reusable rover that will last at least the entire length of each mission. Therefore, the rover must be able to withstand long-term fatigue and components must be replaceable or serviceable. There also must be a way to replenish all crew consumables and fuel. The rover must also have adequate radiation shielding which takes into account the astronauts extended exposure to radiation in and around the outpost. The long-term effects of lunar dust exposure on electronics and cameras are also addressed along with the reliability of components for an extended period of time. The TURTLE outpost rover encompasses these elements to ensure it is operable for long-term missions.

C. Outpost CONOPS

1) Restocking: Since the rover is supplied for a total mission time of eight days, any consumables must be replenished at the outpost. These include but are not limited to fuel, food, atmospheric gasses, LiOH canisters. Waste water and samples must be removed. The fuel, food and atmosphere components would be depleted at the end of eight days and will be refilled at the outpost. Waste water will be kept throughout the duration of the sortie mission and therefore must be emptied at the outpost. The gray waste water will be converted back into usable LH2 and LOX at the outpost. Depending upon the capabilities of the outpost, the solid waste can also be converted into usable water for LH2 and LOX. Food, clothing, and LiOH re-supply will occur through the shirt-sleeve transfer, while atmospheric gasses are refilled through and external umbilical.

There are two methods to refuel the rover. One method considered was to switch out the fuel tanks with spare tanks stored at the outpost. This is feasible since the tanks are light even while filled with fuel. Another method is to hook up the fuel tanks on the rover with an umbilical which can transport the liquid fuel from tanks at the outpost. This has the benefit of less manual labor, but the umbilical must be sufficiently insulated to be effective. In this case there are two sets of fuel where the spare fuel at the outpost is generated from excess water while the rover is out on a mission

2) Outpost-Rover Docking: Several ideas were considered to connect the rover with the outpost. Since TURTLE is equipped with suitports for ingress and egress, the outpost could be designed to have multiple suitport access points that astronauts use for access. The current airlock compartment of the rover is too small to perform re-supply during an outpost mission. Instead, using the suitport as an access port to connect with the outpost would allow sufficient room to move parts, clothing, food, and people between the rover and the outpost. With a pressurized transfer tube the rover could connect with the outpost through a rigid structure. This structure would require significant collaboration with the Lunar Architecture Team to devise a transition point for the shirtsleeve transfer. It is assumed that one astronaut would exit the rover via the suitport and aid in connecting with the outpost while the second astronaut remains inside the rover. The outside astronaut would then use an outpost suitport or airlock to enter the habitat.

3) Retractable Docking: Another effective design is to have a retractable structure that is attached to the outpost and will be pulled by a crew member to connect with the rover. The connector tube would remain depressurized when not in use, and pressurize once connected to both the outpost and rover.

IV. Outreach

The outreach goal for Project TURTLE was 100% participation from the class with a supplemental goal of 100+ hours of outreach. Both goals were achieved with 143 hours of outreach and 18 different events. Our outreach was accomplished through a variety of

small programs that fell under the categories of general public, technical community, and kindergarten through 12th grade students. The series of programs included University of Maryland Open House presentations, elementary, middle, and high school events, design reviews, Maryland Day demonstrations, and other small presentations.

A. Technical Community

The technical community outreach was accomplished by inviting professors, graduate students, industry professionals, and the general public to our three design reviews. In the fall we had a Preliminary Design Review, which was limited to a few guests due to space limitations. In the spring, however, the Baseline Design Review and Critical Design Review were open to the public and well attended. At BDR we hosted five individuals from aerospace industry in addition to UMD professors, and several aerospace graduate students. At the Critical Design Review we hosted approximately 30 people including industry professionals, members of the Space Automation and Robotics Technical Committee, Aerospace professors, aerospace graduate students, and family and friends. The CDR also provided an opportunity to demonstrate the testing capabilities of the mock-up rover. There was an interior layout demonstration as well as a functional suitport demonstration with full ingress and egress. An interior camera displayed the internal activity on a monitor outside the rover for visitors to view.

Another major event was the Rover Rollout. Similar to rollouts in aerospace industry, we invited professors and affiliated professionals to view our rover for the first time with a suitport demonstration and short description of the structural design and interior layout. Visitors were encouraged to go inside the mock-up and sit in the driving and sleeping configurations.

B. General Public

Open House The open house programs were run through the University of Maryland Aerospace Engineering Department as part of a prospective student open house day. Project TURTLE was presented by a group of 3-4 team members as part of the Aerospace Engineering presentation. In addition to discussing the overall TURTLE design, we spoke about the design process for a large scale project. The presenting students also stayed after the presentation to answer questions from prospective students and parents. The open house presentations gave the team a chance to show high school students and parents what is possible in aerospace engineering at Maryland. Project TURTLE participated in four open house sessions with 14 different student presenters.

Maryland Day The largest outreach event was our participation in Maryland Day. Maryland Day is a university-sponsored day where the campus is open to the public with activities and presentations from most of the colleges and departments. There were an estimated 70,000 people in attendance. To demonstrate the capabilities of our mock-up and explain our design project, there were a number of activities during the day. There were suitport demonstrations every hour and a few people were let inside the rover when crowds were low. As seen in Figure 16 the mock-up itself was on display all day with a poster nearby showing the construction process and final flight design. A space simulation program called Celestia was also available for users to travel through a simulated solar system. For younger children, a variety of candy was available to design and create a candy lunar rover. These main activities were staffed by team members all day. Generally one student monitored the Celestia program, while the other 2-3 students would explain and demonstrate the mock-up design. Team members also helped out at a variety of other aerospace related programs throughout the day, including a mini wind tunnel demonstration with Sigma Gamma Tau, the Aerospace Honor Society, and staffing the Aerospace Engineering information table.

Figure 16. Maryland Day Rover Demonstrations

Other Activities There were several other small presentations and events including a presentation for a UMCP-AIAA general body meeting, the Aerospace Advisory board, and the Aerospace Banquet. We also provided tours of the University of Maryland labs for visitors of the AIAA student conference this spring, which included a tour of the Space Systems Lab where the mock-up rover was constructed.

C. K-12 Grade School

School presentations were one of the biggest priorities of TURTLE outreach. We visited four high schools and

two middle schools in the Maryland/Virginia area and had ten team members present between the six schools. We also had one elementary school visit the Space Systems Lab where team members gave them a tour of the lab, including the TURTLE mock-up.

High school presentations introduced the basic concept of engineering and the design process in addition to Project TURTLE. Students asked questions about the specifics of the rover and how it comes together as a whole. Although a few were engineering classes, most were regular science classes or science clubs. Our presentation at George Marshall High School in Falls Church, Virginia is shown in Figure 17.

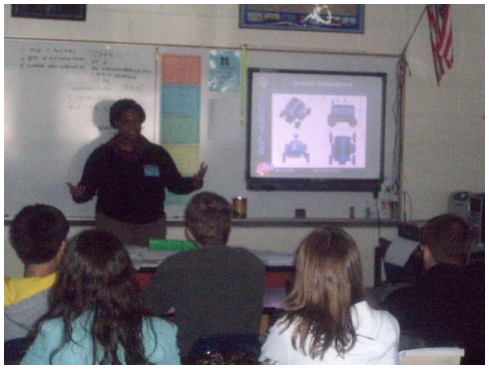

Figure 17. Presentation at Marshall High School

We took a slightly different approach for the middle school presentation. Because middle school students often have a shorter attention span and less technical knowledge, it was important to design a presentation that was interactive and presented information on their level. To engage the class, the presentation was centered on students responding to questions and developing what engineering is through their answers. Students learned how many types of engineering are important in aerospace engineering and "designed" a space capsule by determining what each type of engineer would design in the project. After showing the rover design and mock-up pictures there were many questions from the students about TURTLE specifics including "How do you use the bathroom with less gravity?" These school presentations play an important role in developing engineering interest at a young age. Without these presentations, many students may not be exposed to engineering until high school or even college.

Fifty students and chaperons from Drew Elementary School also came to visit the Space Systems Lab, which is shown in Figure 18. While at the lab TURTLE team members gave the students a tour of lab facilities, the TURTLE mock-up, and let a few students inside the cabin. Through the K-12 outreach visits, the team spoke to approximately 285 students and teachers in the Maryland and Virginia area.

Figure 18. Drew Elementary School Students at the Space Systems Lab

V. Acknowledgments

The TURTLE team would like to thank the Maryland Space Grant Consortium for generously funding our Rover Mock-up construction and the Space Systems Lab at the University of Maryland for providing construction, testing, and storage space for the mock-up.

REFERENCES

[1] "Background: Meteoroid and Debris Models." 26 August 2004. <http://www.spenvis.oma.be/spenvis/help/background/metdeb/metdeb.html#INTRO>

[2] Cucinotta, Franics A., Walter Schimmerling, John W. Wilson, Leif E. Peterson, Guatam D. Badhwar, Premkumar B. Saganti, and John F. Dicello. "Space Radiation Cancer Risks and Uncertainties for Mars Missions." Radiation Research 156(2001): 682-688.

[3] Delta IV Payload Planners Guide. United Launch Alliance, 2007

[4] Encyclopedia Britannica. Characteristics of oxide glasses, Britannica Online, 2008.

[5] Fred Schubert. Ideal Anti-Relection Coating,Rensselaer Polytechnic Institute, 2007.

[6] Graziosi, David and Lee, Ryan. I-Suit Advanced Spacesuit Design Improvements and Performance Testing. ILC Dover, Inc. 2003 <http://human.space.edu/old/docs/ICES03-2443.I-Suit_tests.pdf>

[7] Halfhill, Tom R. "Tom's Inflation Calculator" 2008. May 4,2008. <http://www.halfhill.com/inflation.html>.

[8] Hoffman, Stephen J. Advanced EVA Capabilities: A Study for NASA's Revolutionary Aerospace Systems Concept Program. Science Applications International Corporation. 2004. <http://ston.jsc.nasa.gov/collections/TRS/_techrep/TP-2004-212068.pdf>

[9] Human Energy Requirements: Report of a Joint FAO/WHO/UNU Expert Consultation. In Food and Nutrition Technical Report Series Rome: FAO. 2001.

[10] NASA. "Cost Estimating Handbook." 2004. 4 May 2008. <http://ceh.nasa.gov/webhelpfiles/Cost_Estimating_Handbook_NASA_2004.htm>.

[11] NASA. "Micrometeoroid Protection." May 1996. <http://klabs.org/DEI/References/design_guidelines/environment_series/1107.pdf>

[12] NASA. NASA-STD-3000: Man-Systems Integration Standards. ONLINE. Revision B, July 1995. Available: <http://msis.jsc.nasa.gov/> [7 May 2008].

[13] NASA. NASA-STD-(I)-5001: Structural Design and Test Factors of Safety for Spaceflight Hardware. ONLINE. 2006. Available: <http://standards.nasa.gov/released/NASA/NASA_STD_I_5001A_09_12_06.pdf> [4 May 2008]

[14] The Scientific Context for Exploration of the Moon: Final Report. National Research Council. Washington D.C.: The National Academies Press, 2007. <http://books.nap.edu/openbook.php?record_id=11954&page=1>