Launch Vehicle Systems

- Case Study: Saturn V
  - Data is from SA-503 Saturn V Flight Manual, MSFC-MAN-503, NASA TM-X-72151, November 1968
- Trajectory and dynamics
- Onboard systems
- Ground systems

Mass Changes During Launch

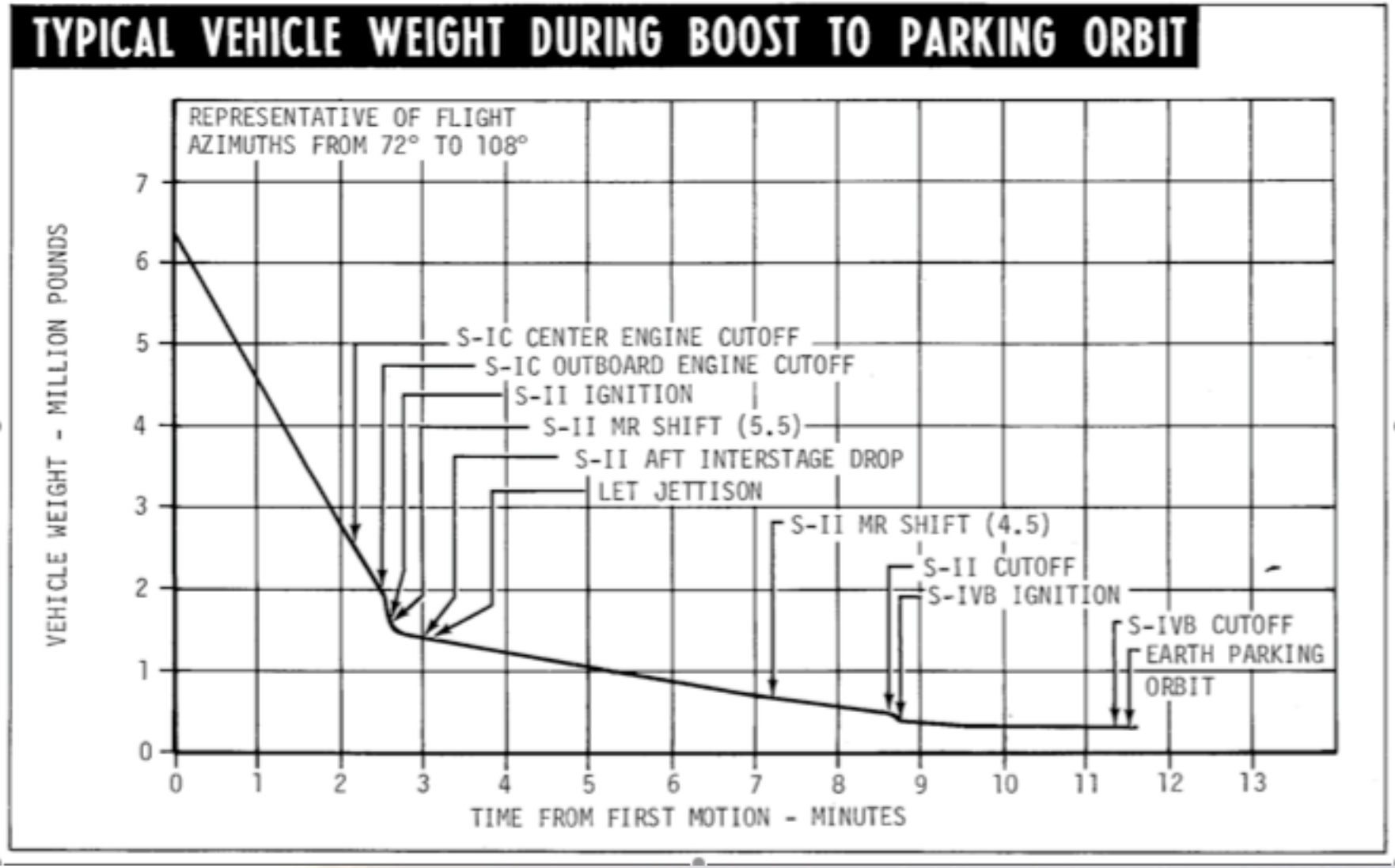

Pitch Attitude Angle During Launch

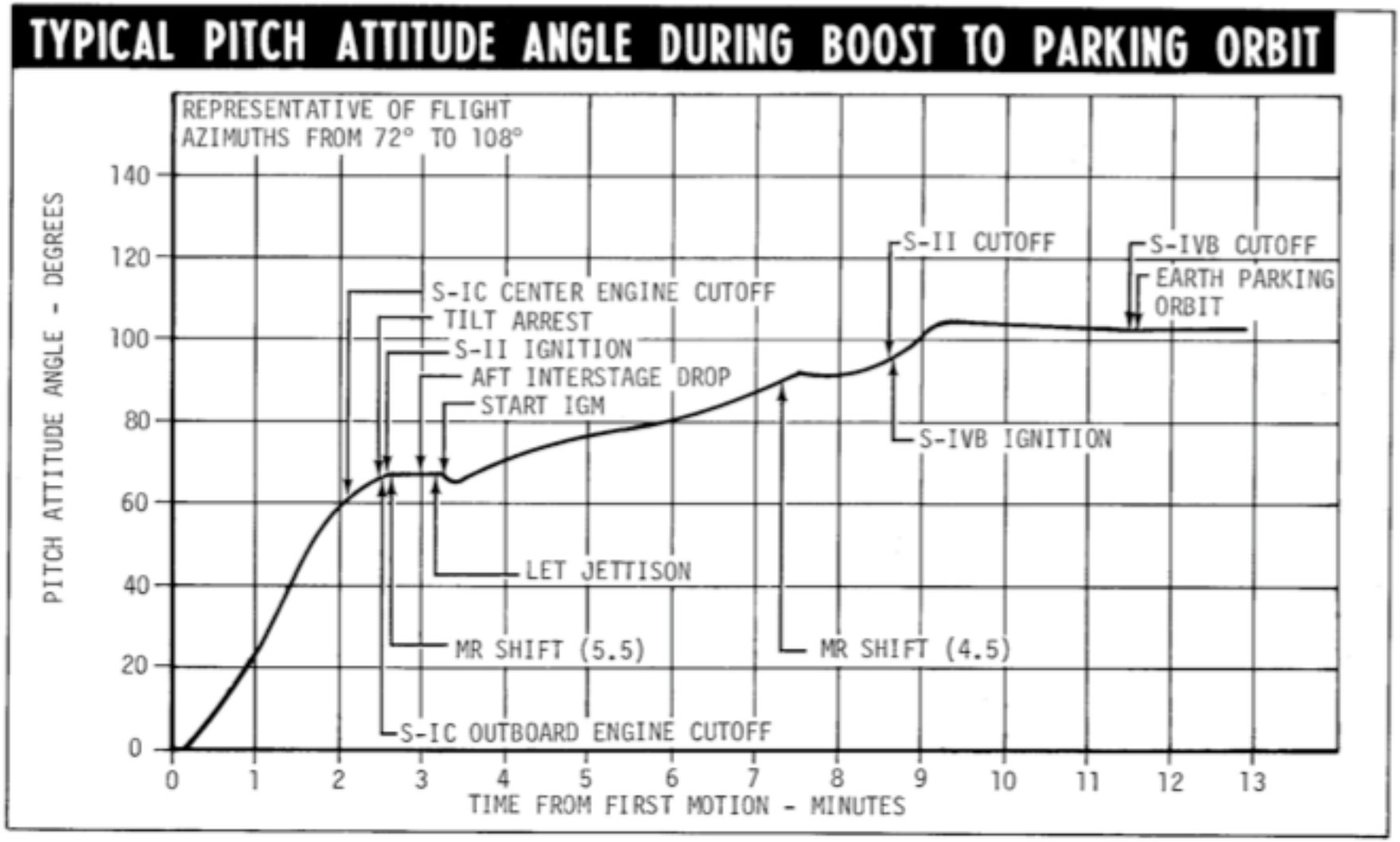

Aerodynamic Pressure During Launch

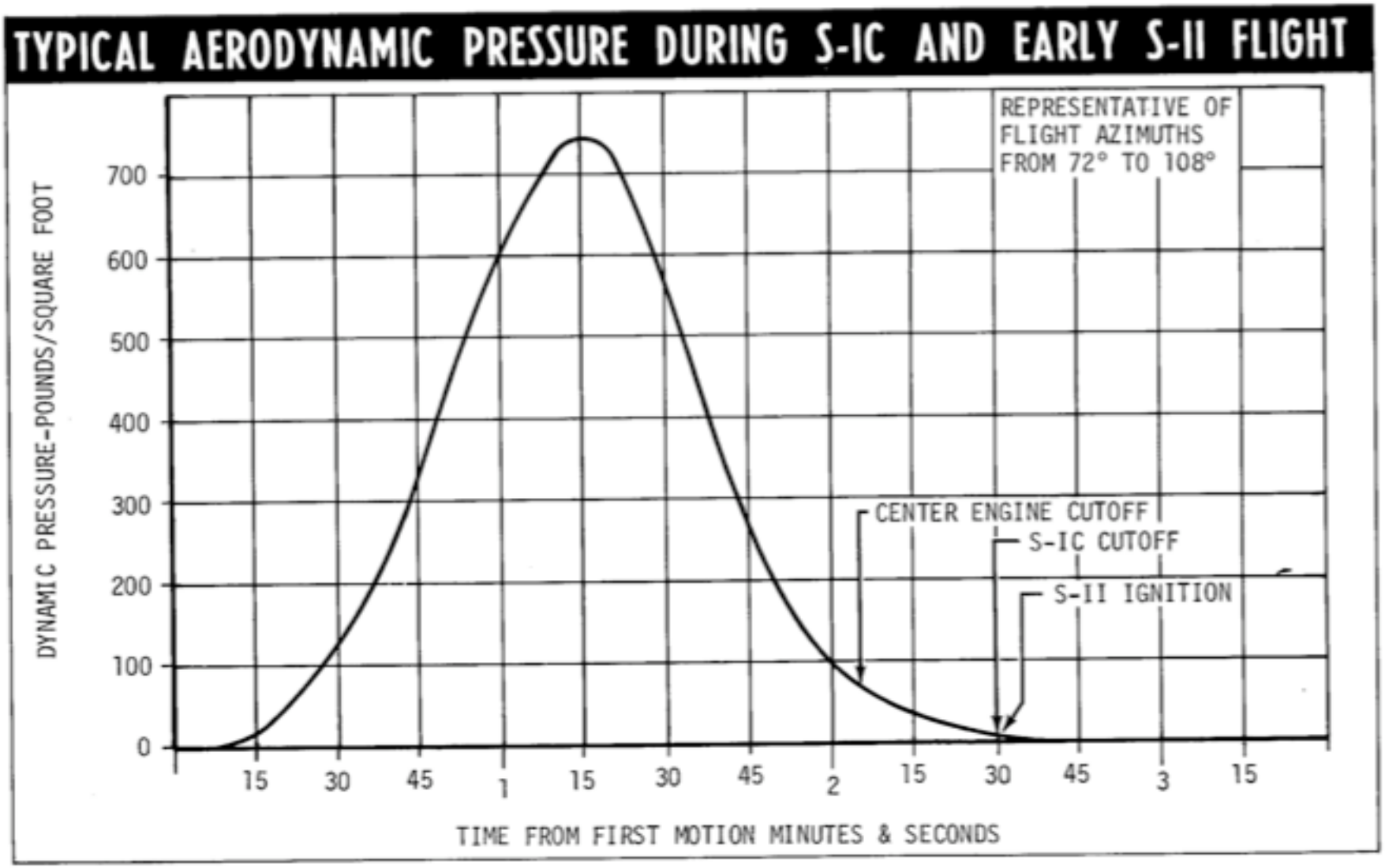

Velocity as a Function of Time

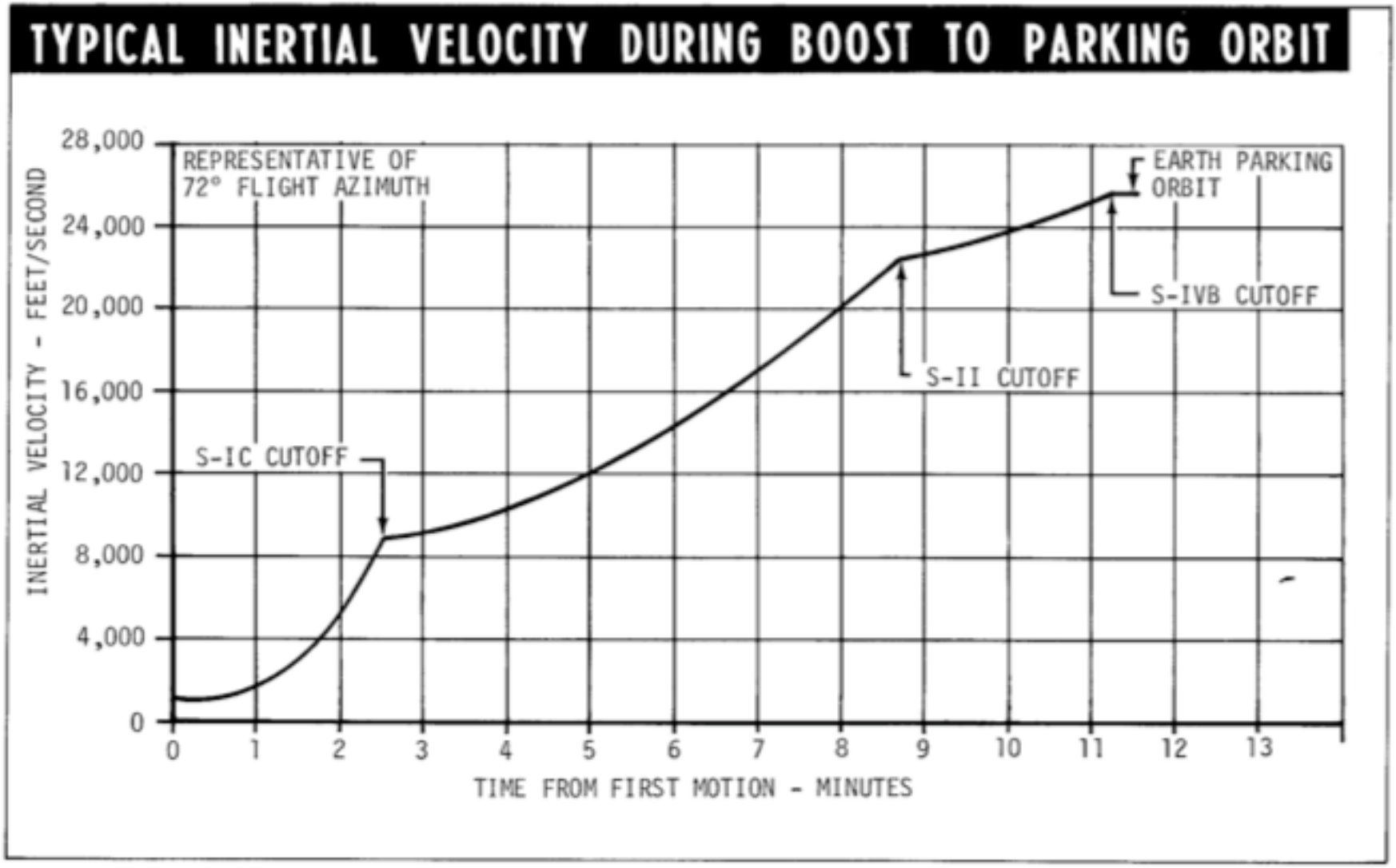

Acceleration as a Function of Time

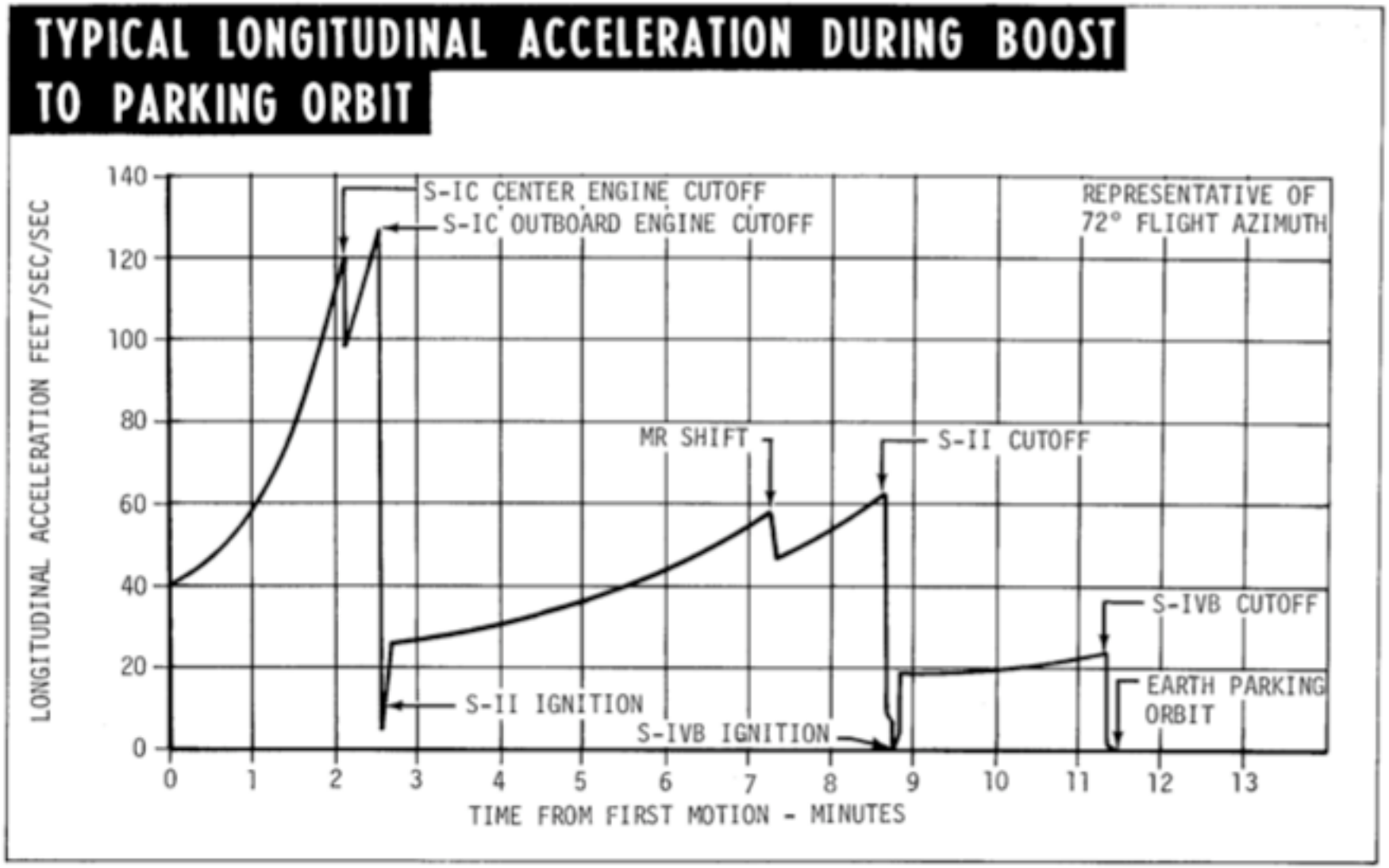

Altitude vs. Time

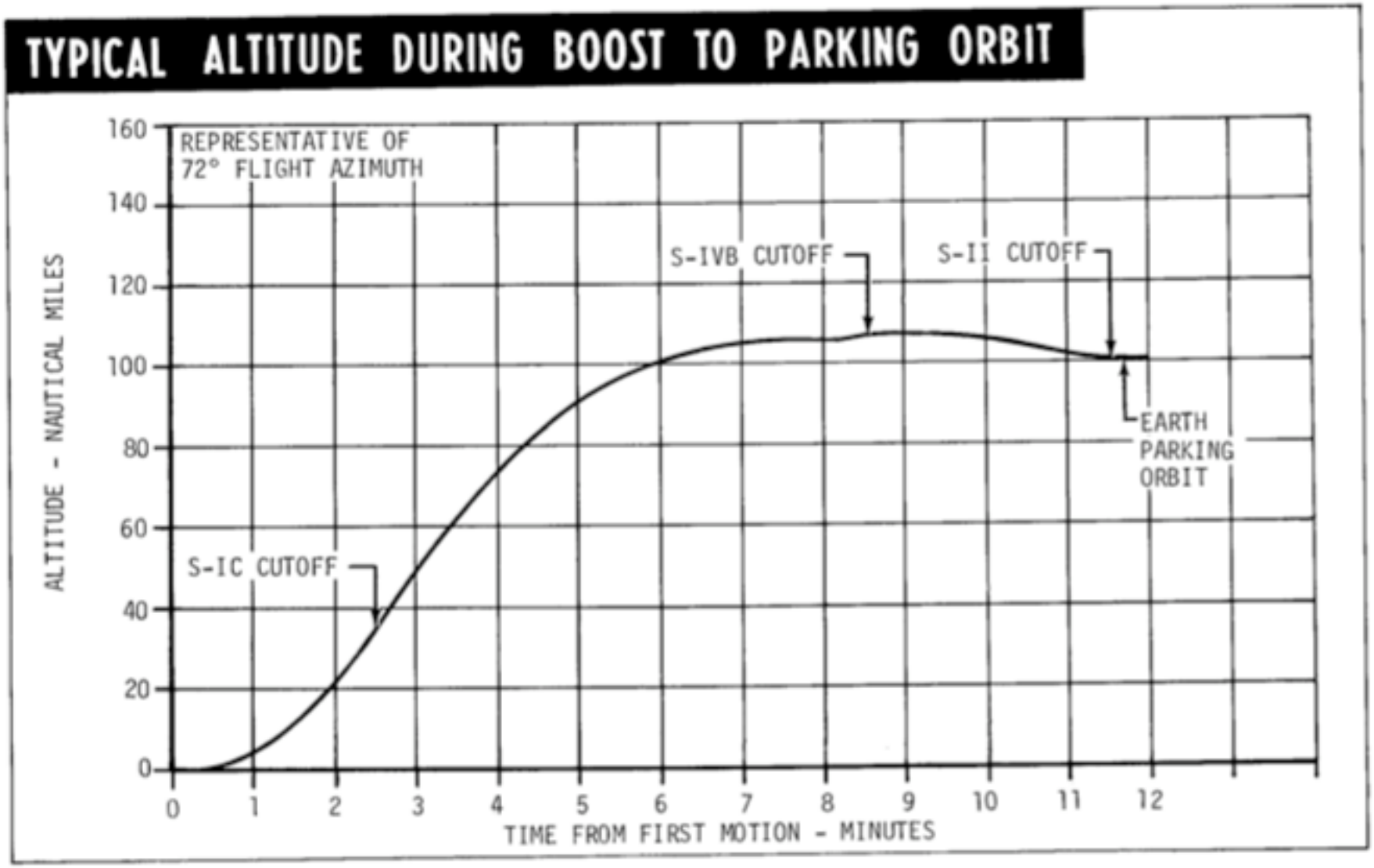

Down-Range Distance vs. Time

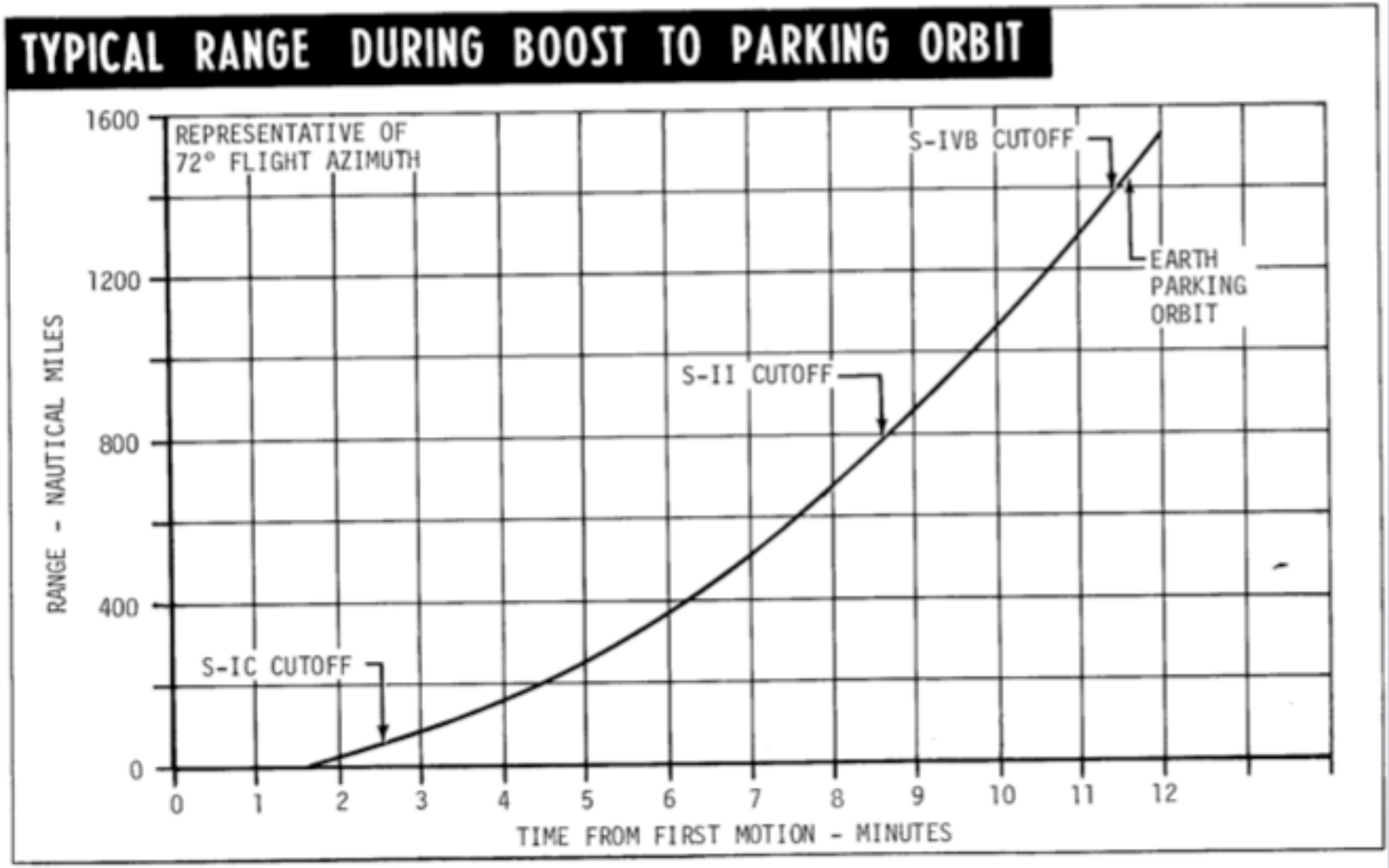

Angle of Attack in Trajectory

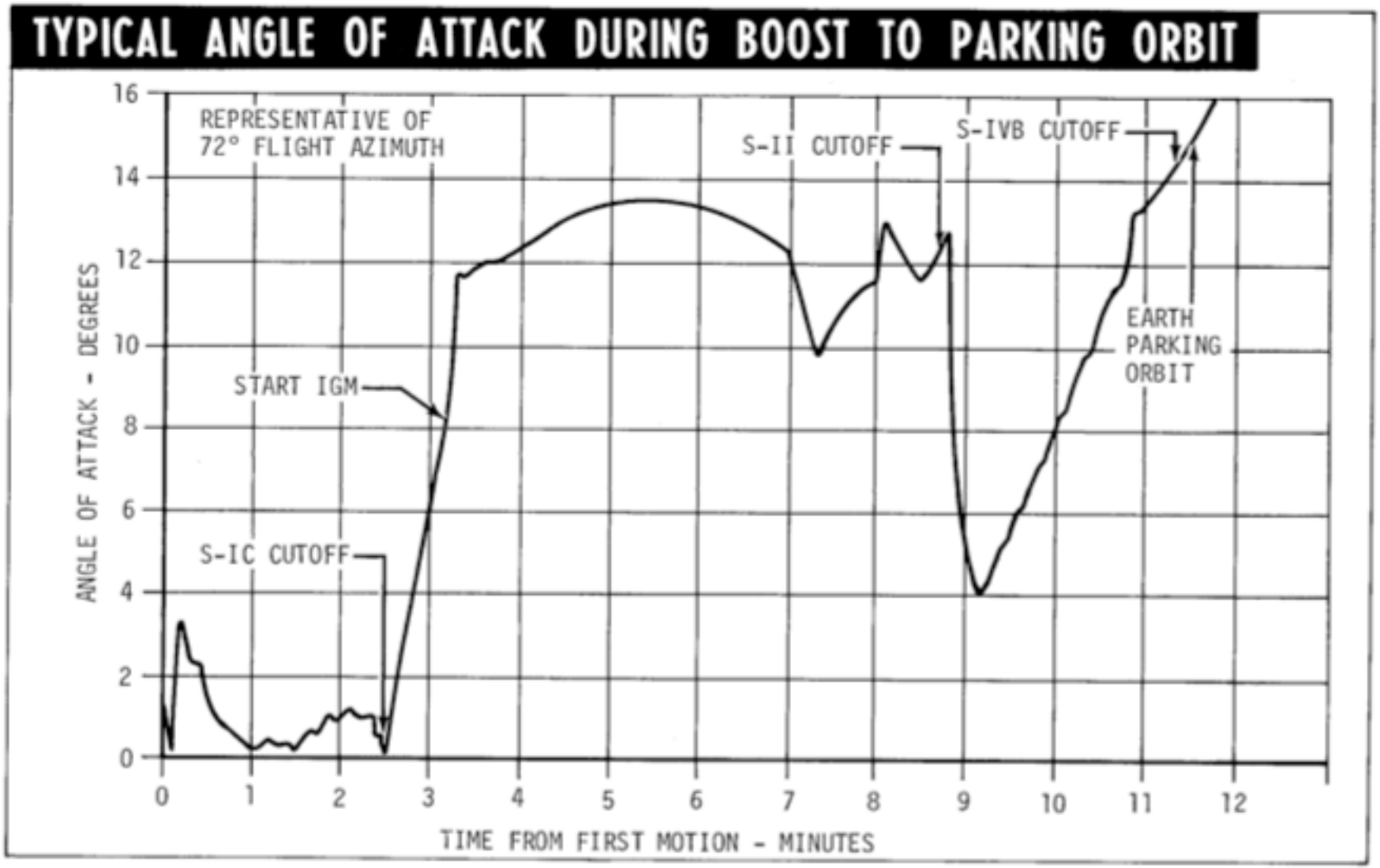

First Stage Thrust vs. Time

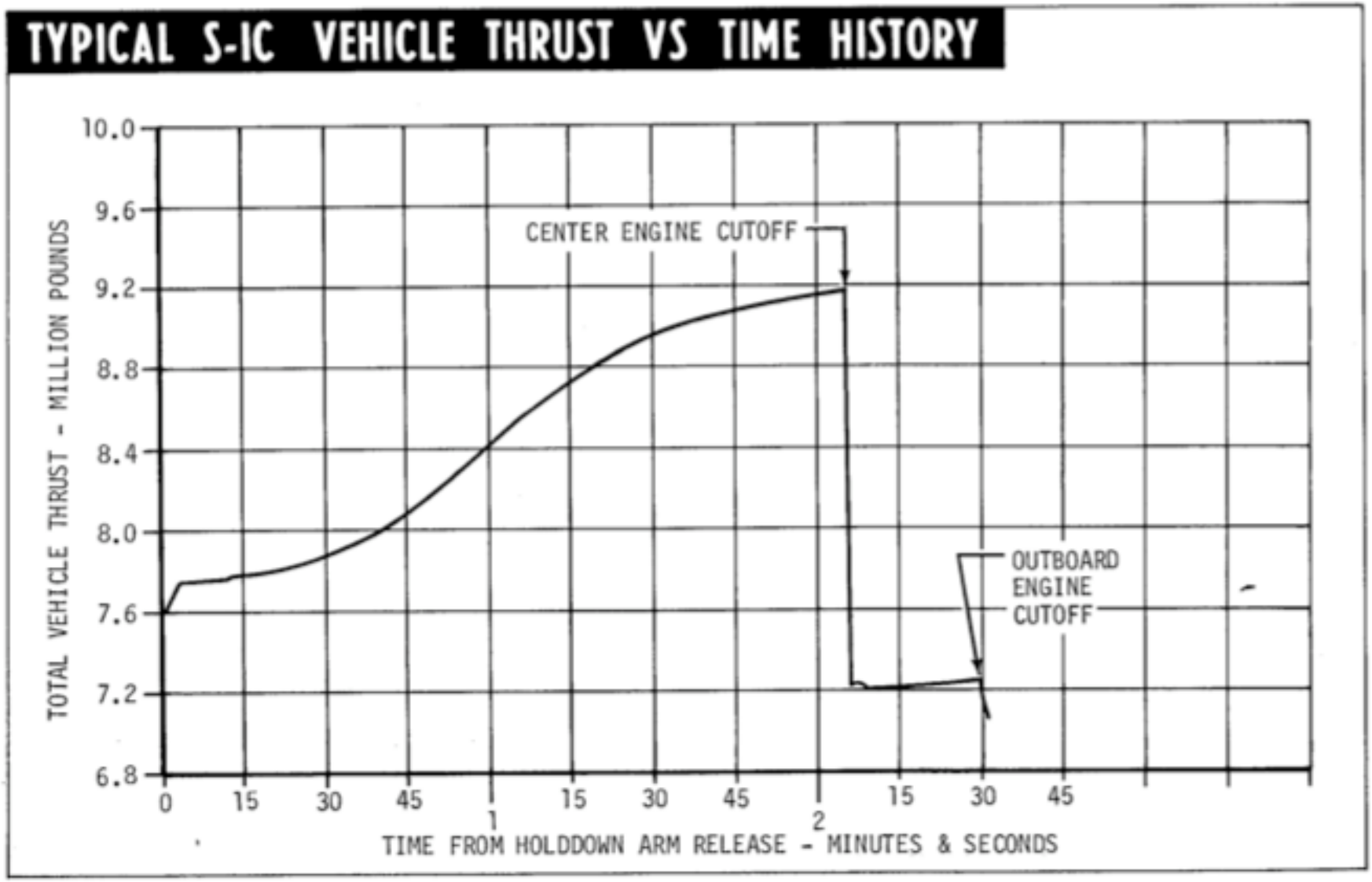

S-IC First Stage Internal Configuration

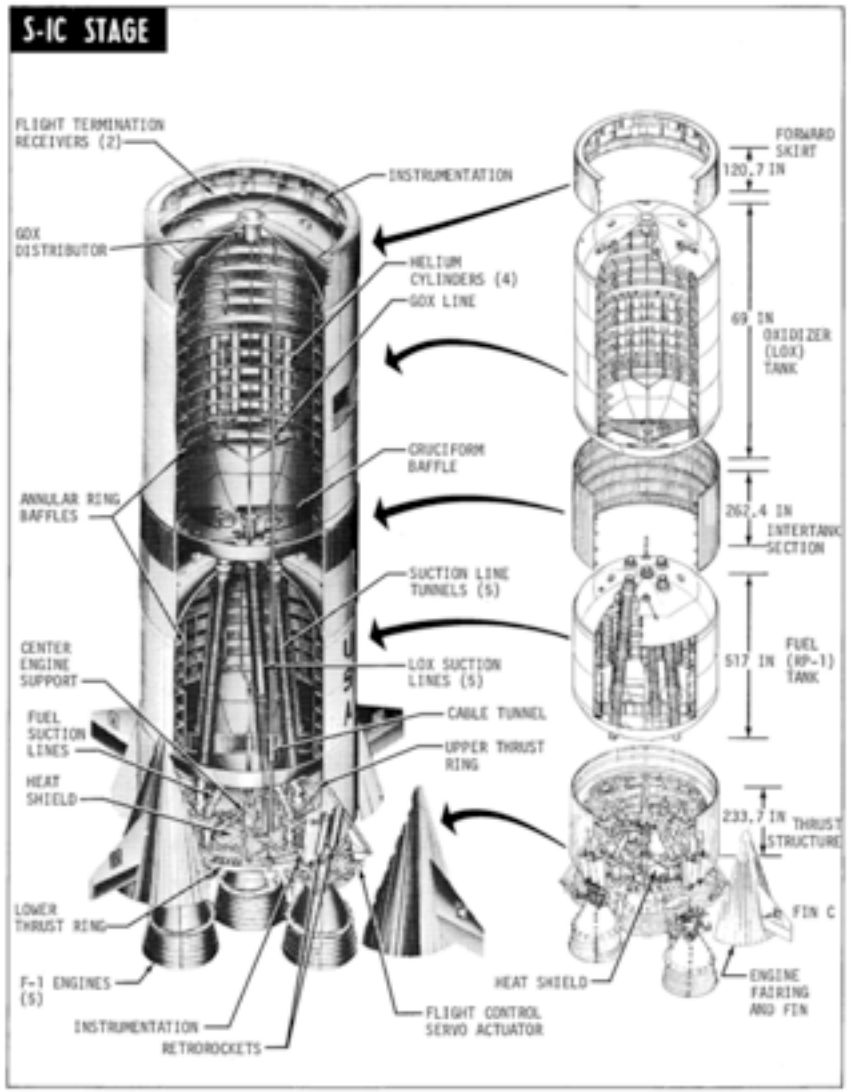

Hydrogen Leak Sensors

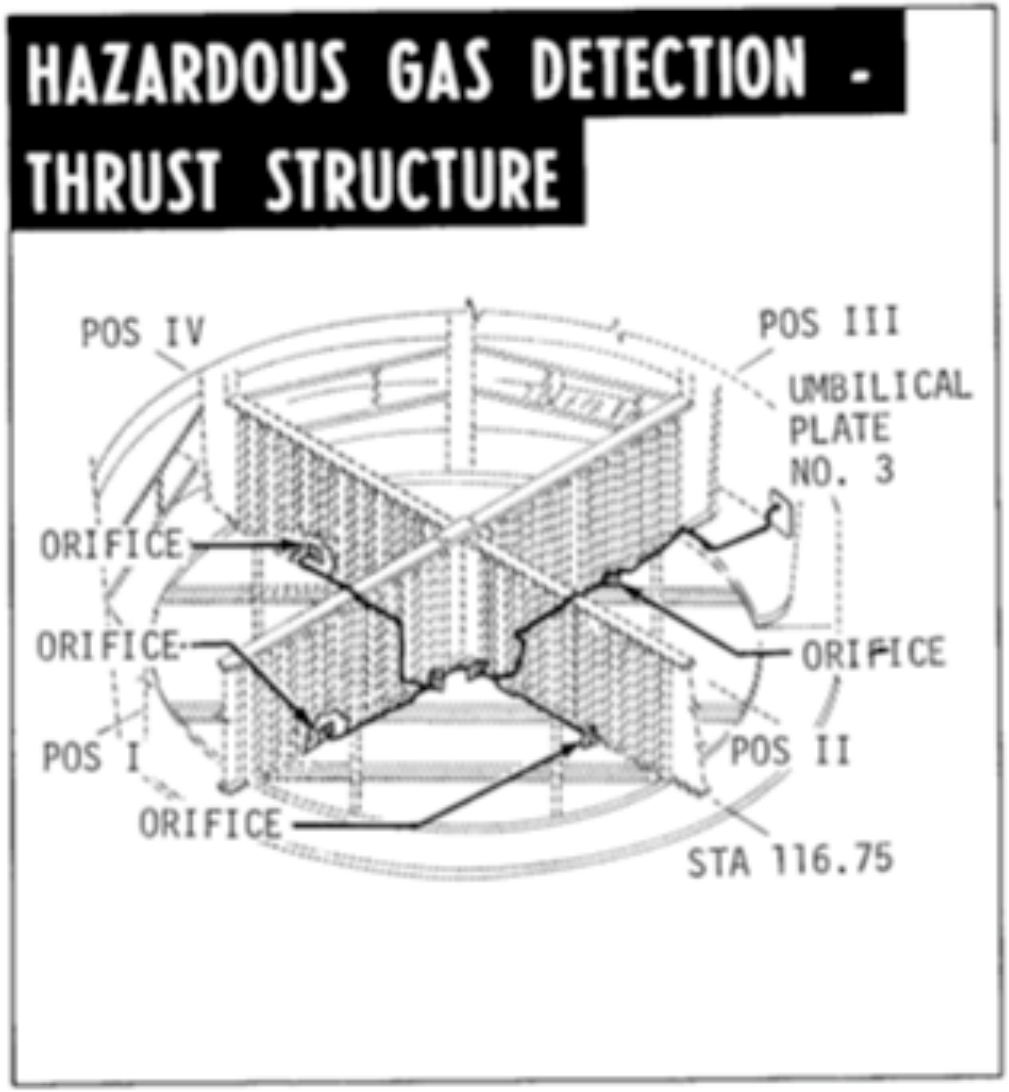

Pogo Suppression System

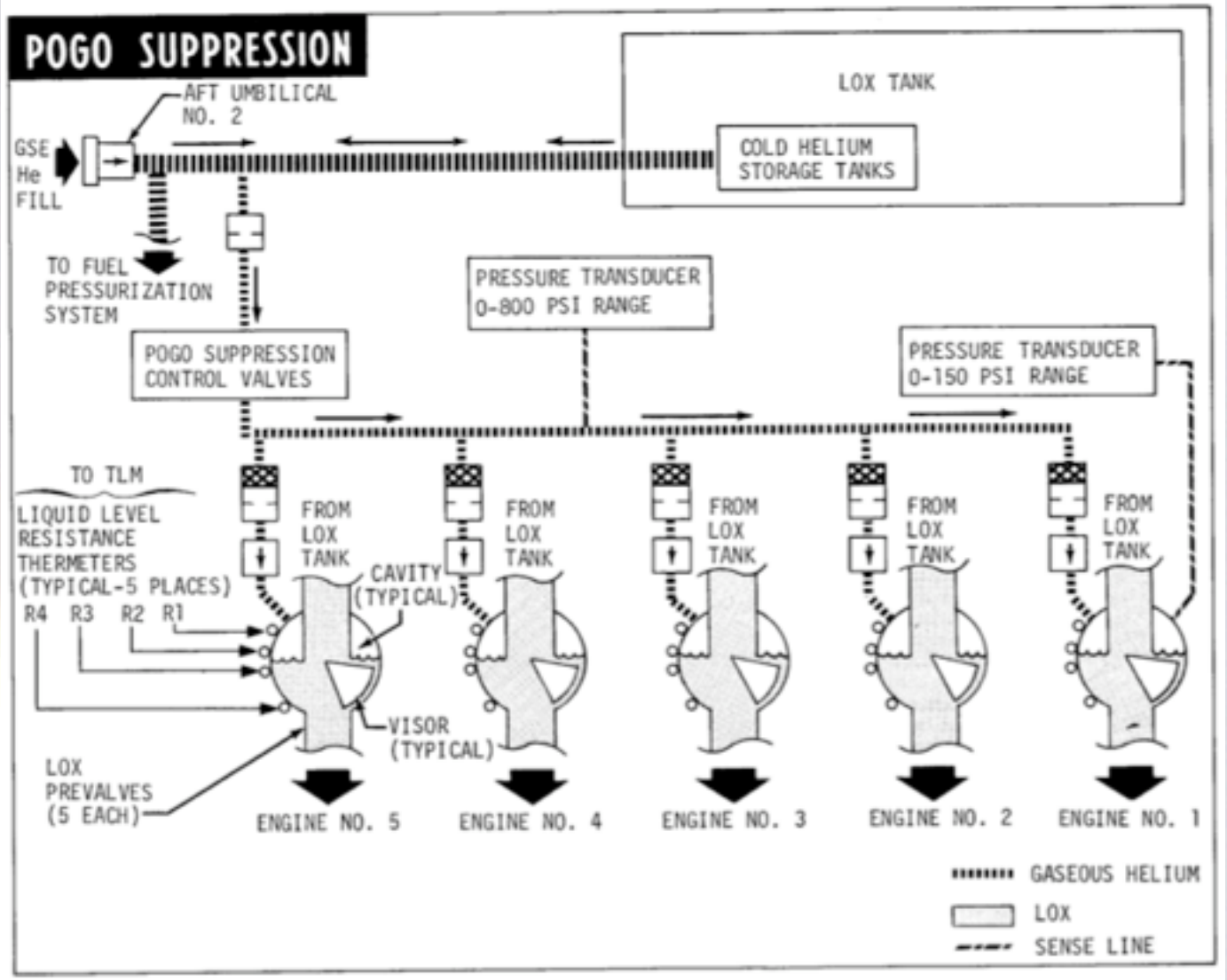

S-IC LOX Feed System

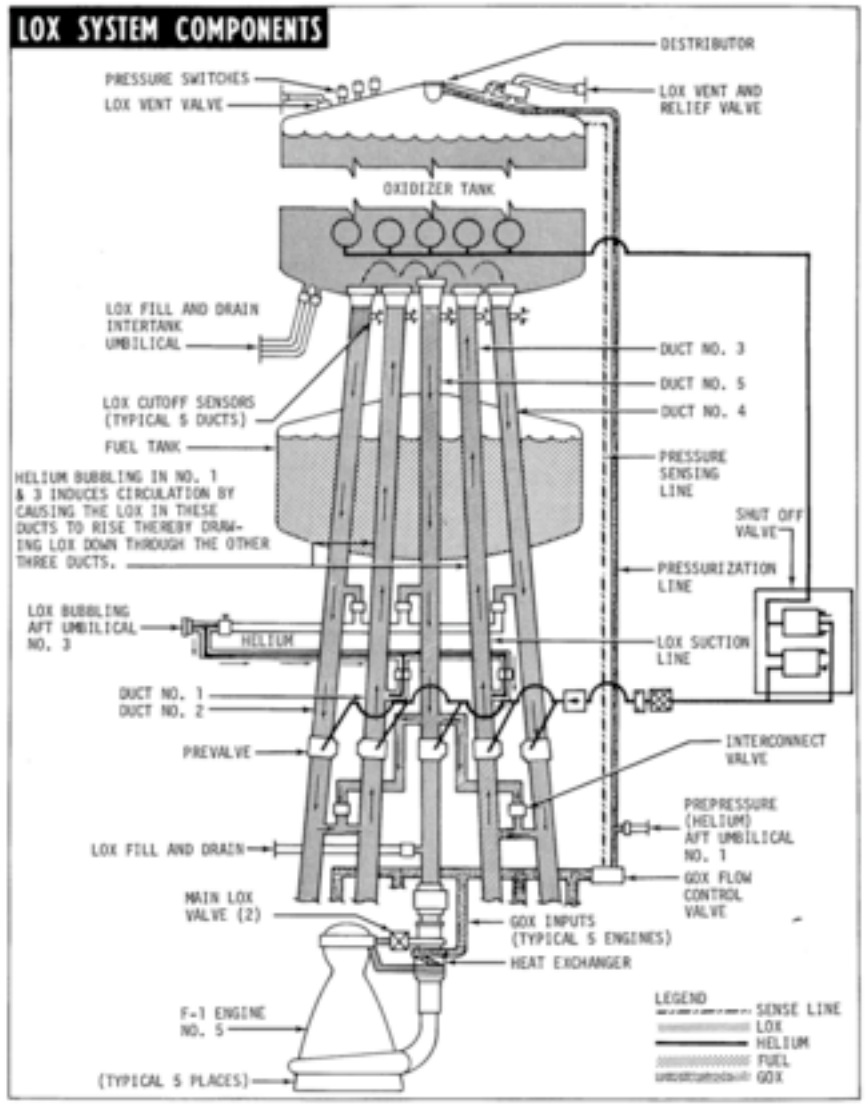

S-II Stage Structure

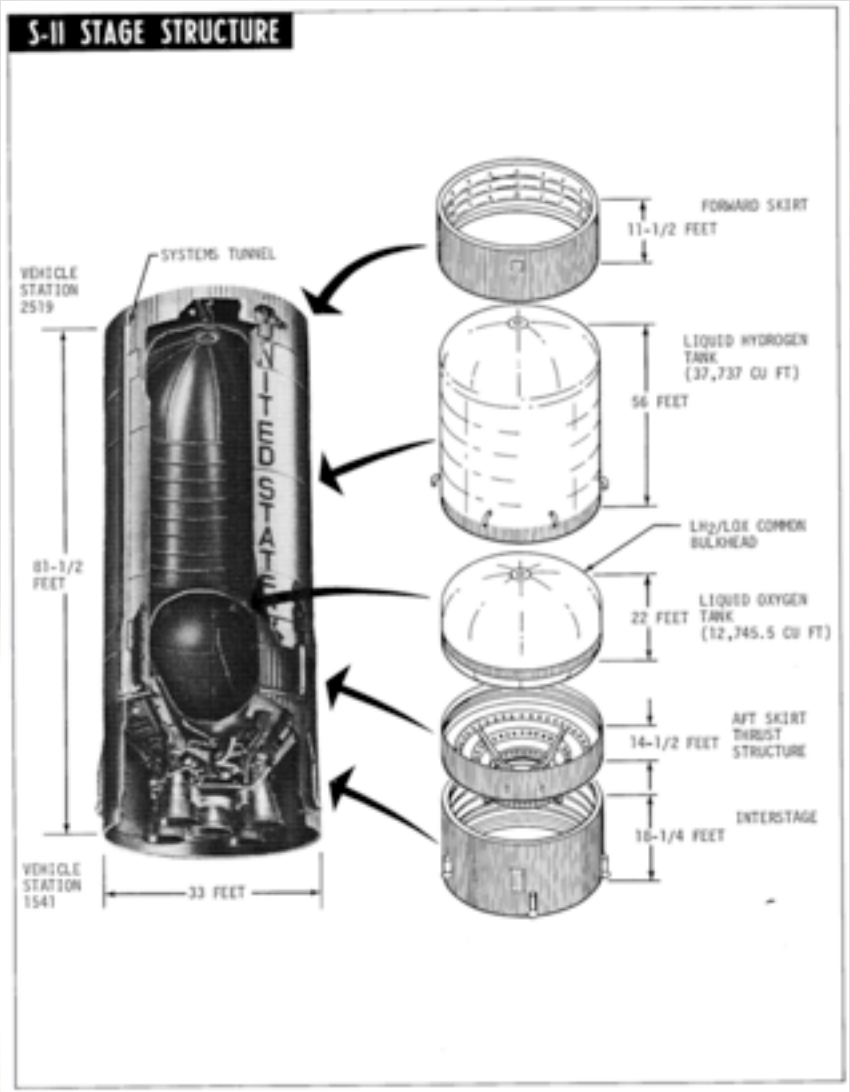

S-II LOX Tank Configuration

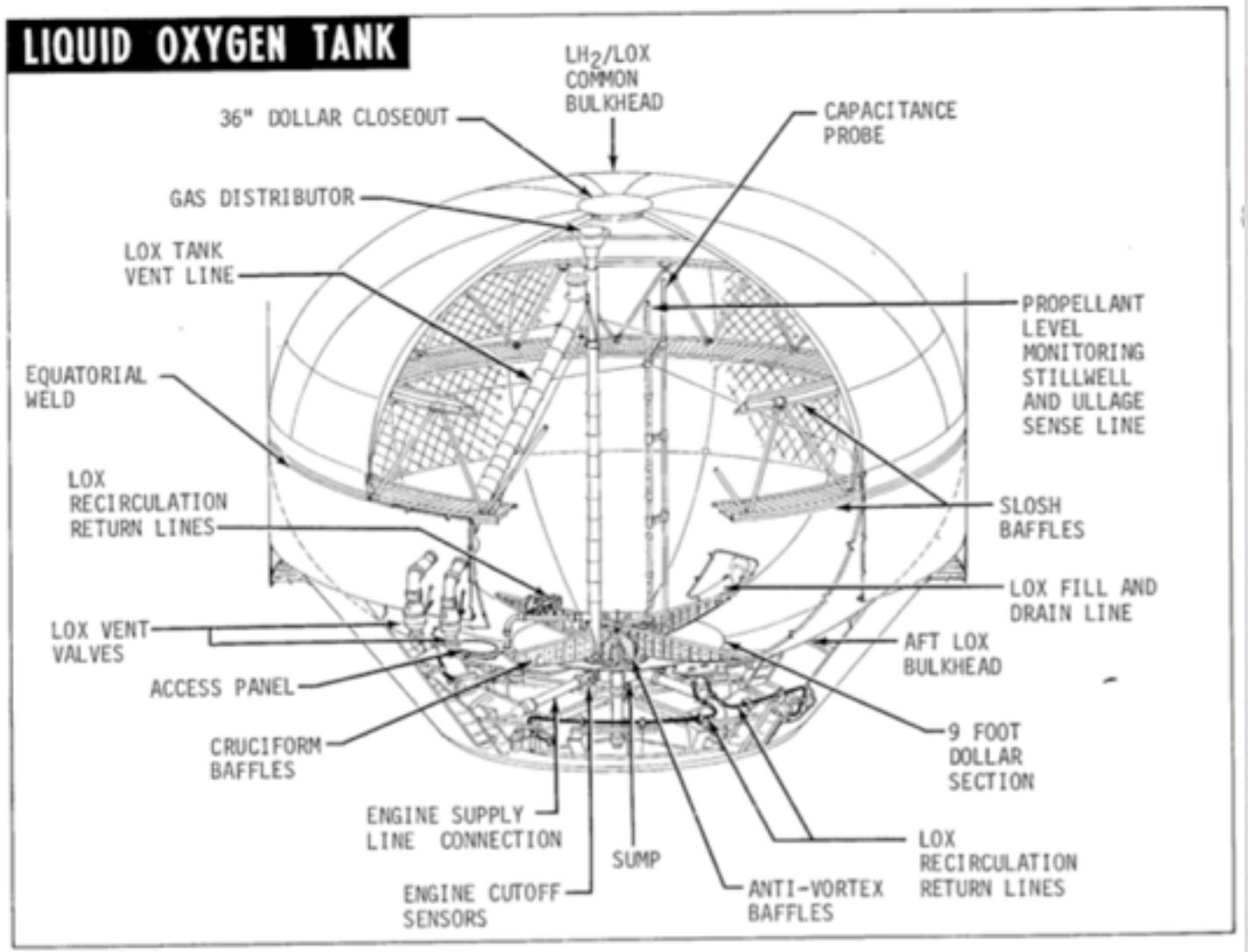

S-II Tank Purge and Leak Detection

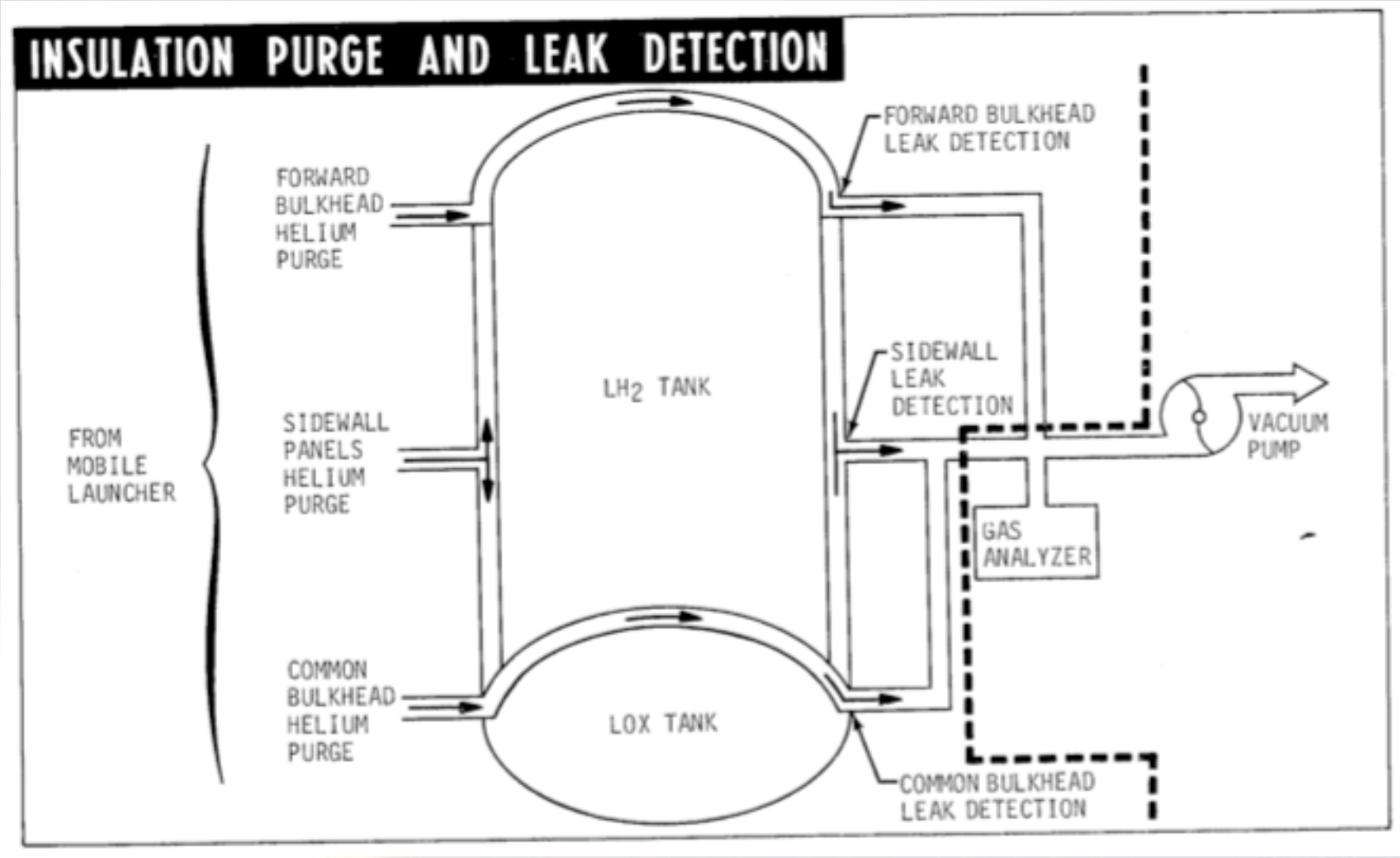

J-2 Rocket Engine (S-II Stage)

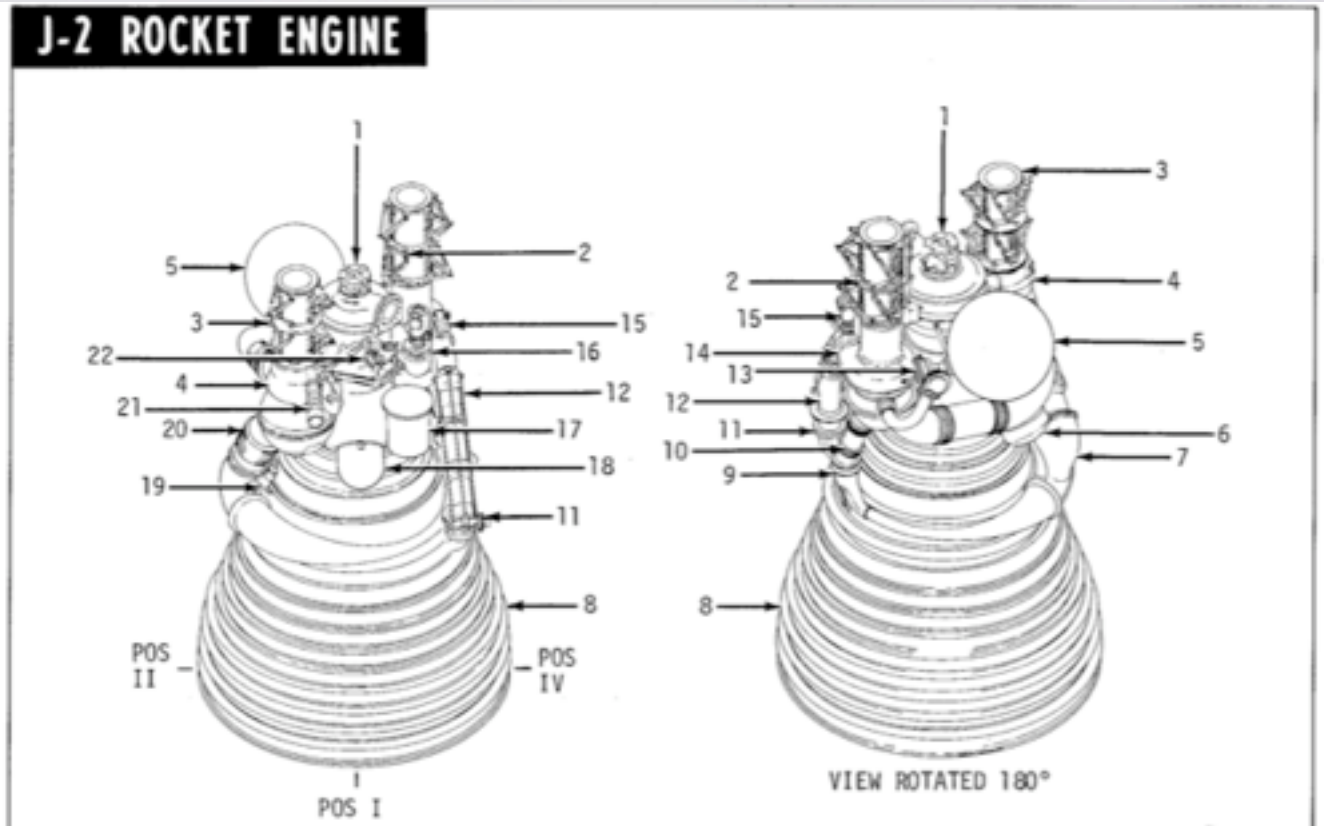

1. GIMBAL
2. FUEL INLET DUCT
3. OXIDIZER INLET DUCT
4. OXIDIZER TURBOPUMP
5. START TANK
6. AUXILIARY FLIGHT INSTRUMENTATION PACKAGE
7. EXHAUST MANIFOLD
8. THRUST CHAMBER
9. OXIDIZER TURBINE BYPASS VALVE
10. TURBINE BYPASS DUCT
11. MAIN FUEL VALVE
12. HIGH PRESSURE FUEL DUCT
13. START TANK DISCHARGE VALVE
14. FUEL TURBOPUMP
15. FUEL BLEED VALVE
16. GAS GENERATOR
17. ELECTRICAL CONTROL PACKAGE
18. PRIMARY FLIGHT INSTR. PACKAGE
19. ANTI-FLOOD CHECK VALVE
20. HEAT EXCHANGER
21. PROPELLANT UTILIZATION VALVE
22. PNEUMATIC CONTROL PACKAGE

S-II Flight Control System Block

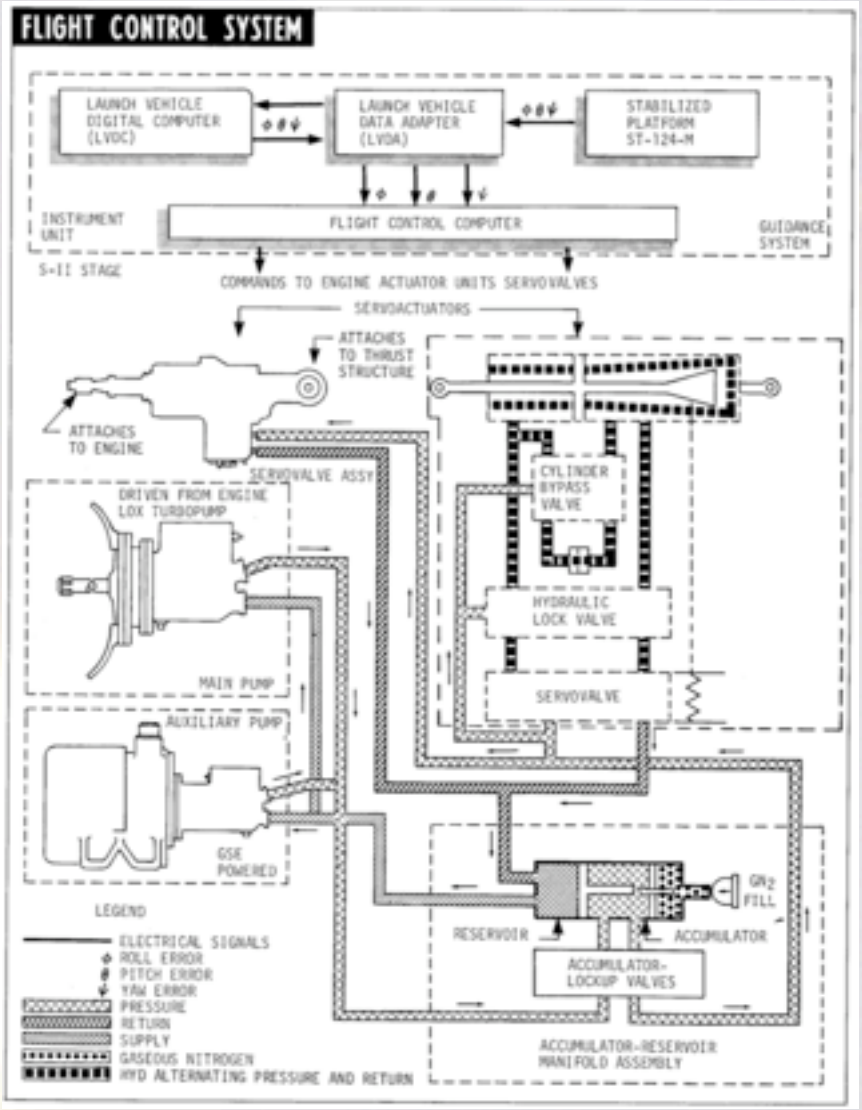

S-II Propellant Pressurization Systems

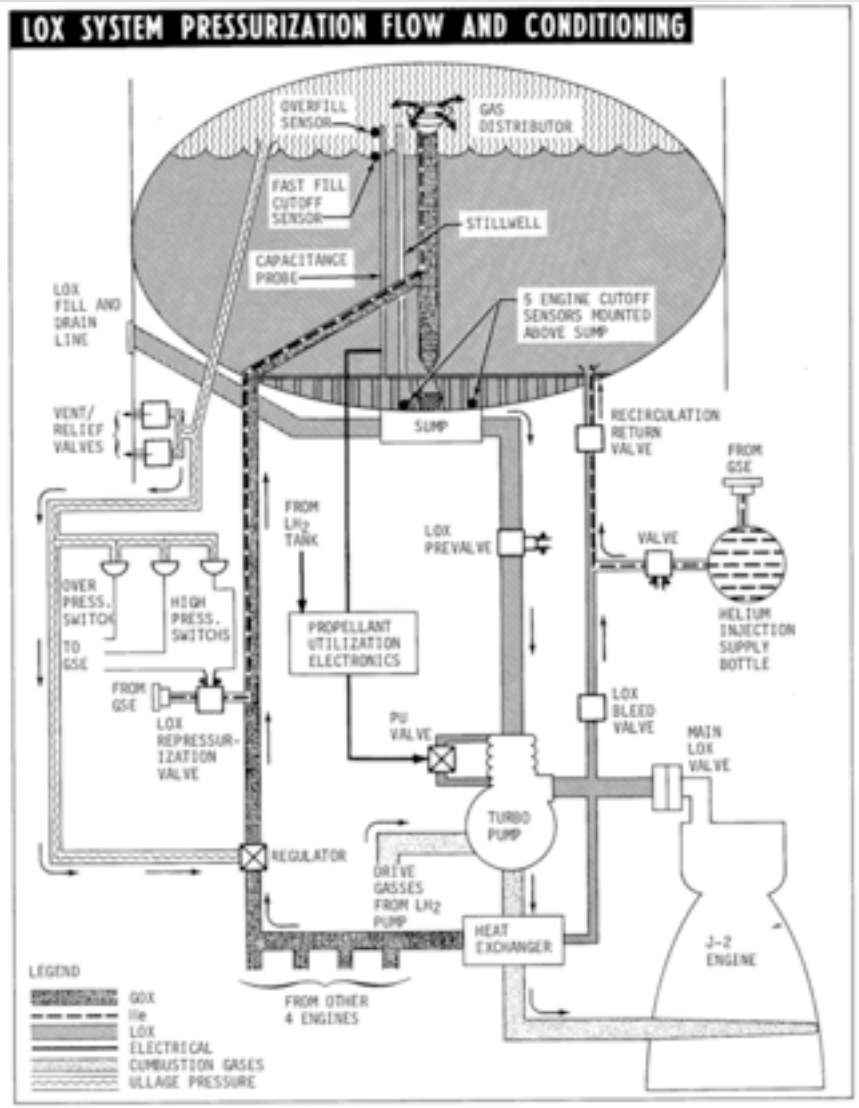

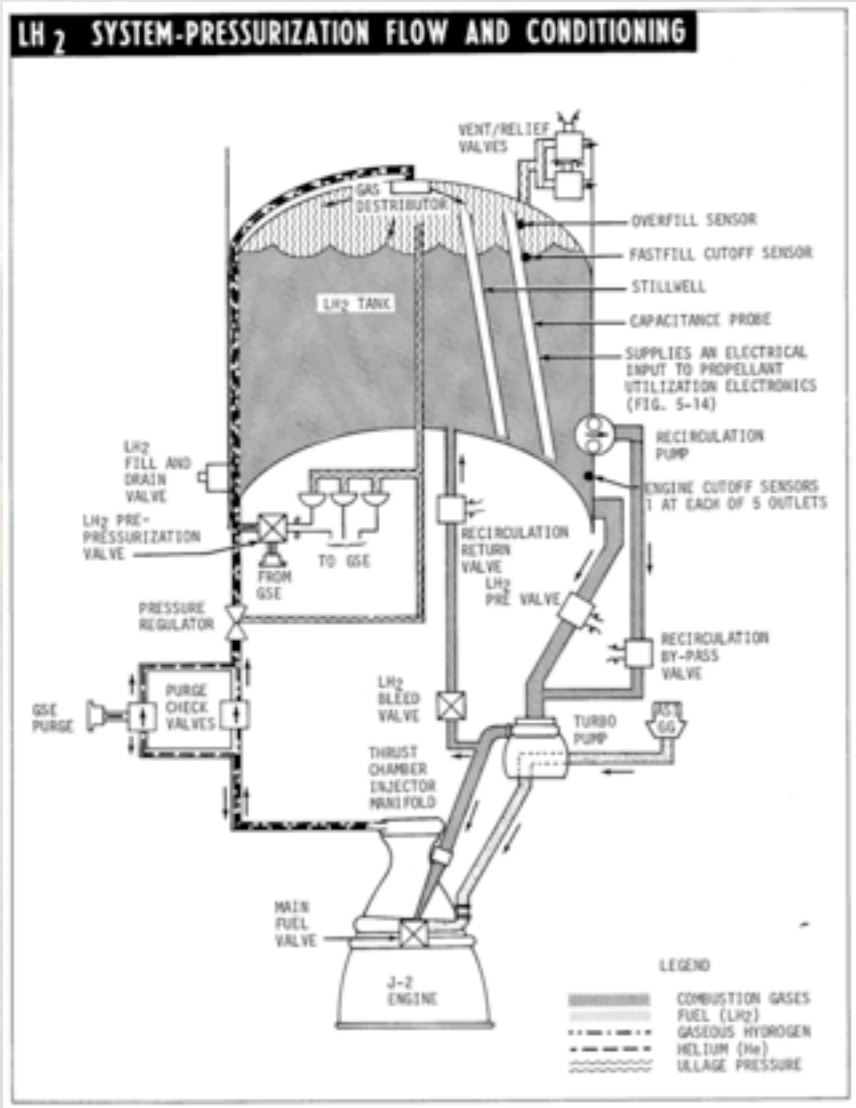

Range Safety System (S-IC/S-II)

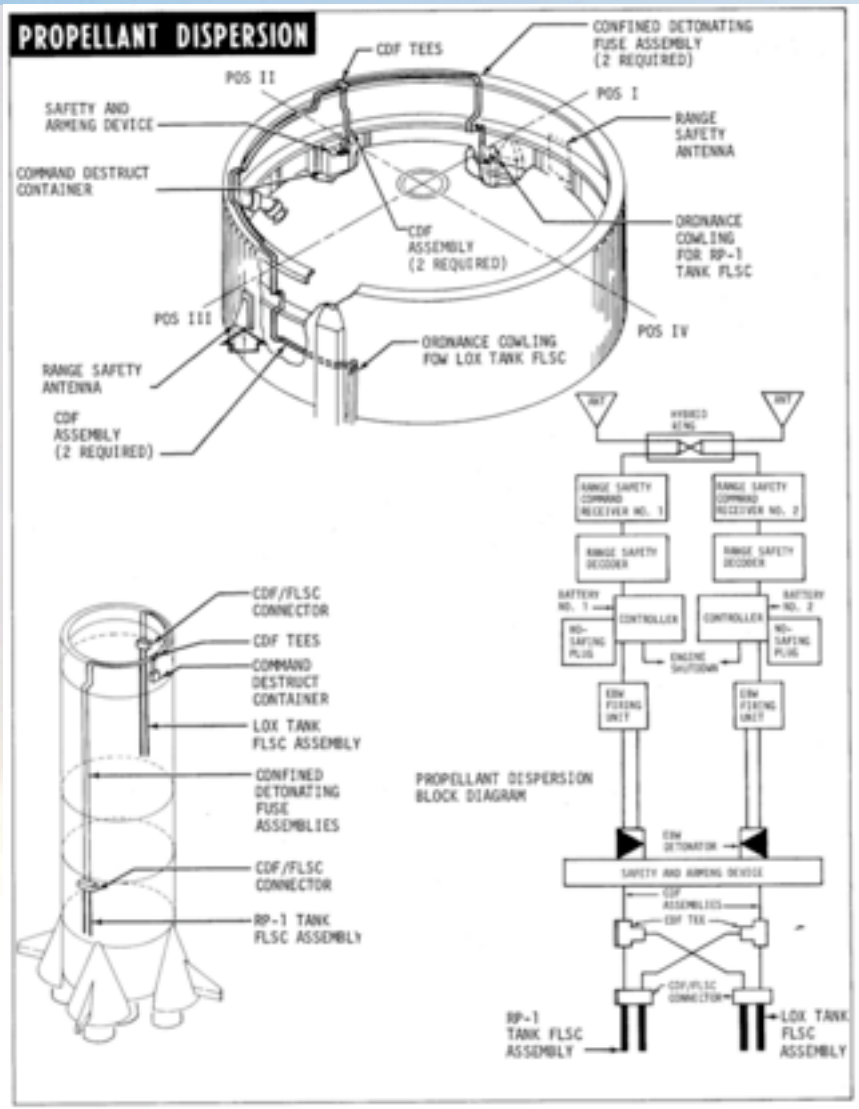

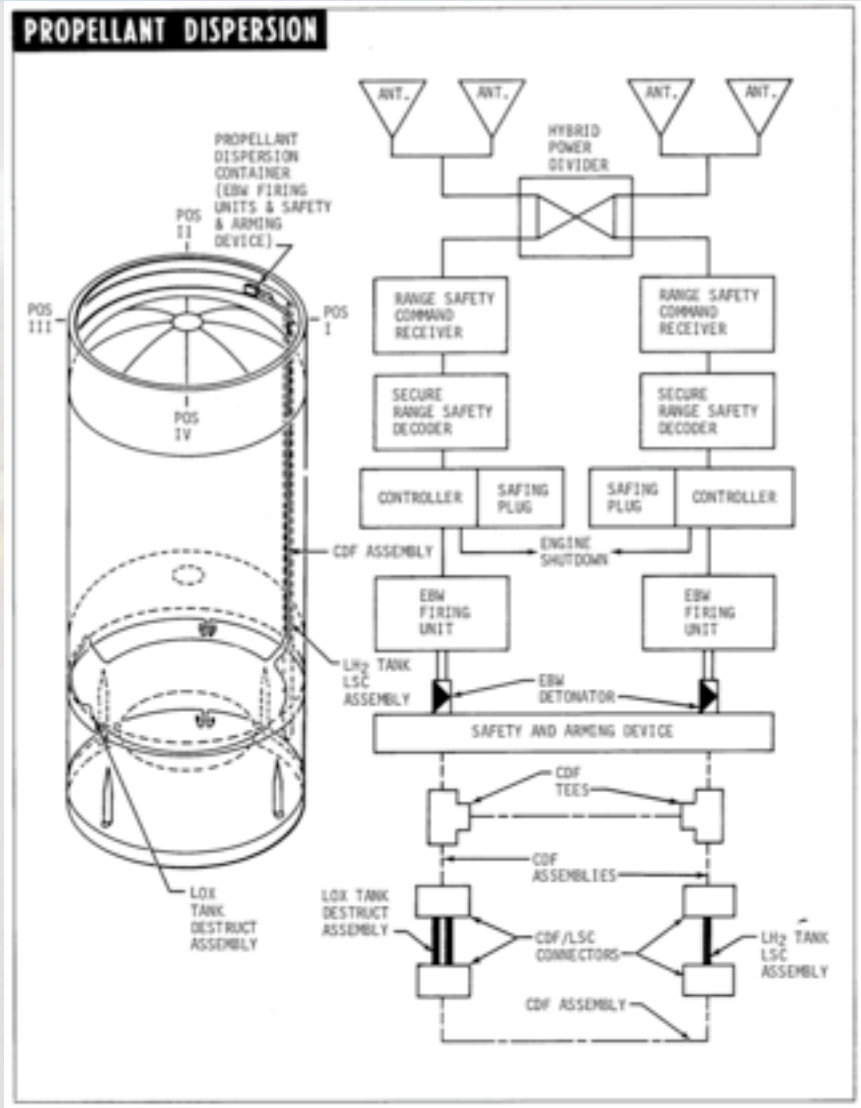

Safe and Arm Switch

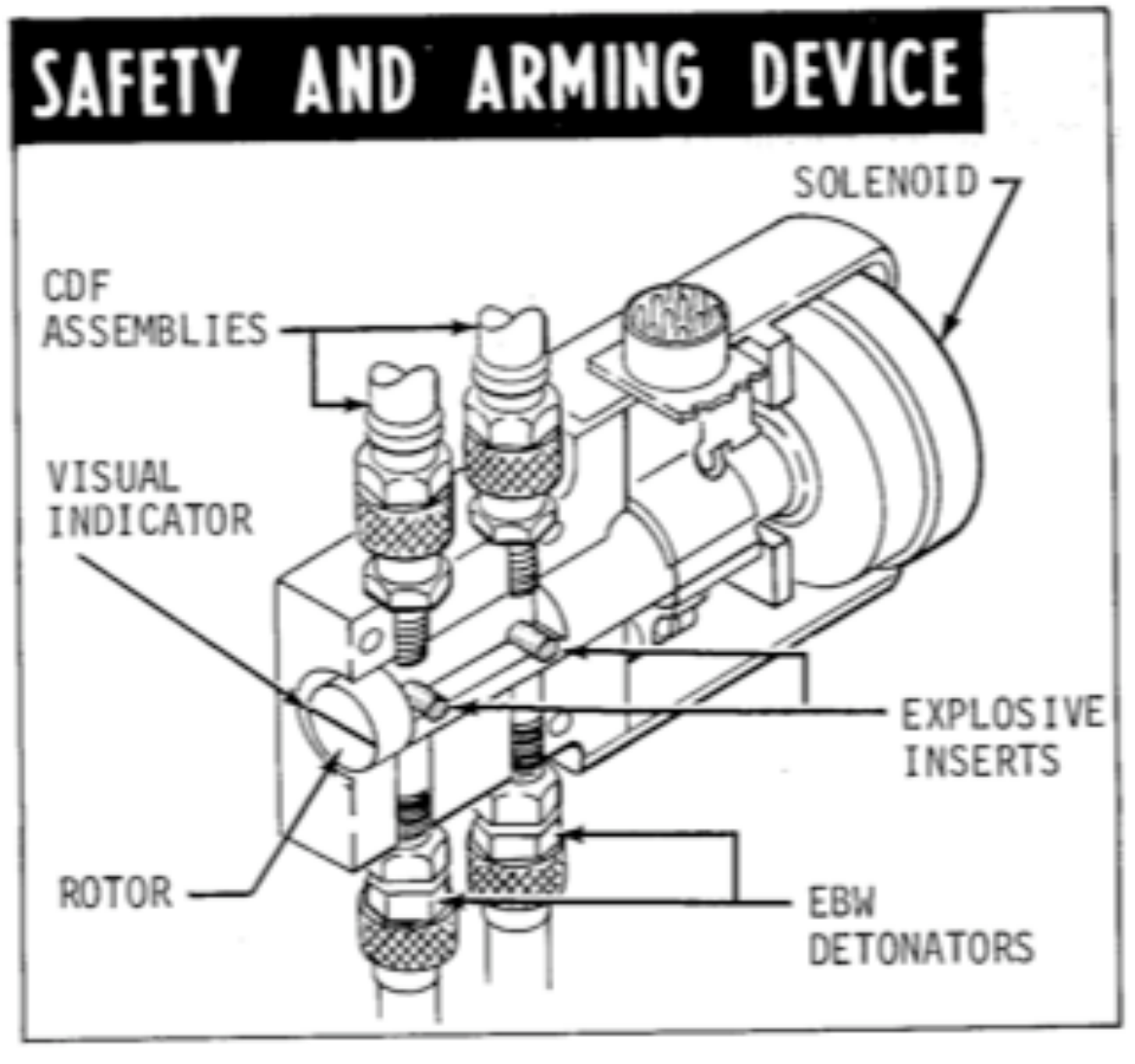

Stage Separation

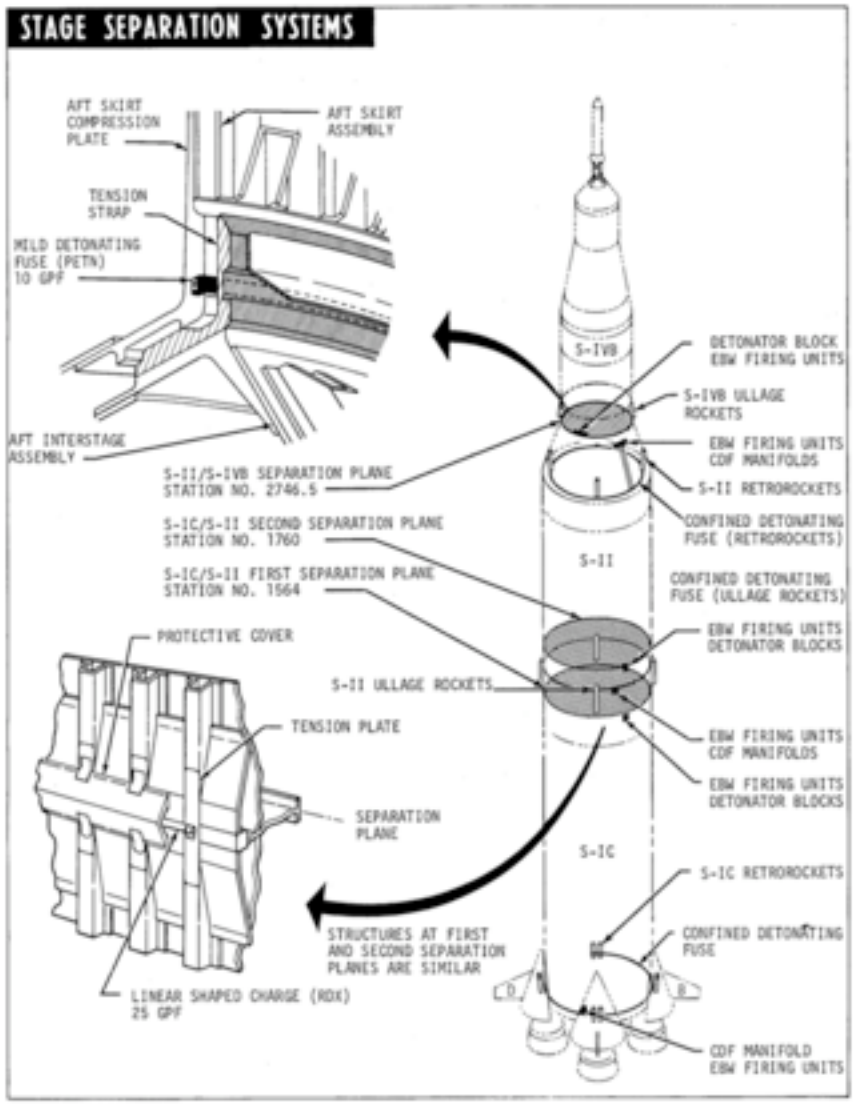

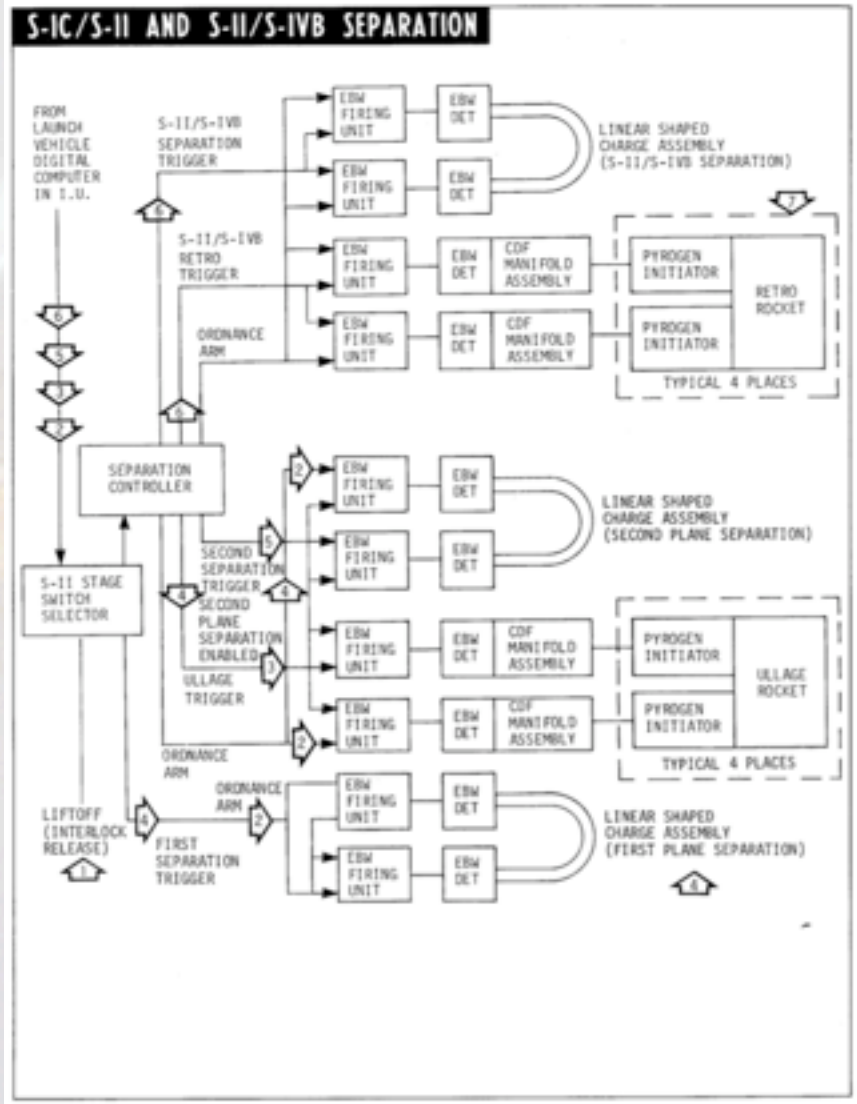

Retro and Ullage Rockets (Stage

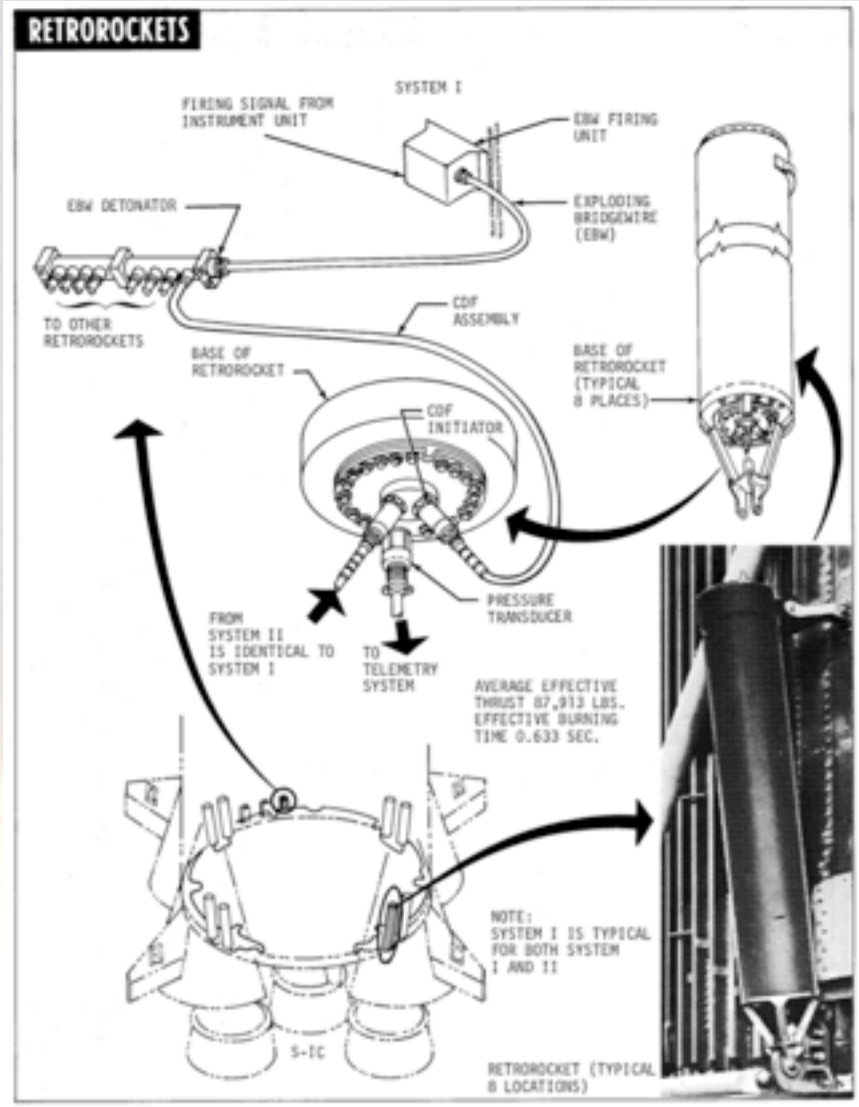

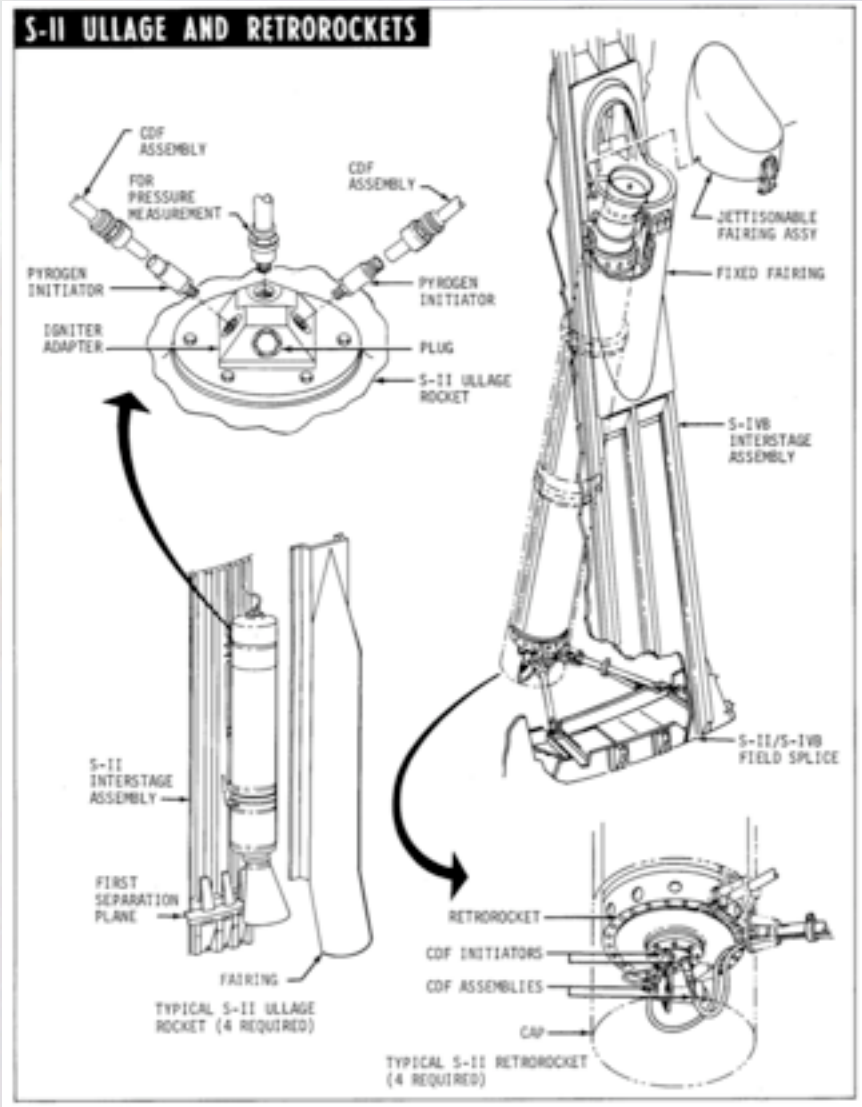

S-IVB Configuration

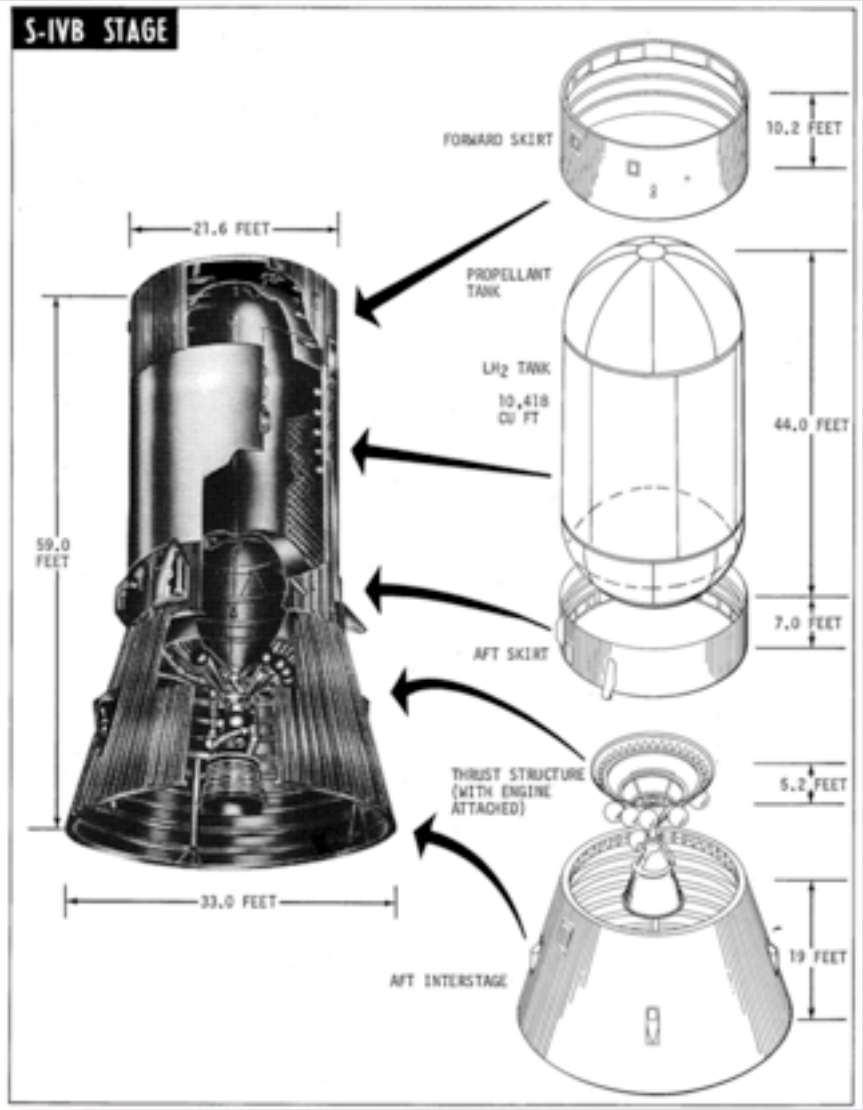

O2/H2 Burner (GHe Heater)

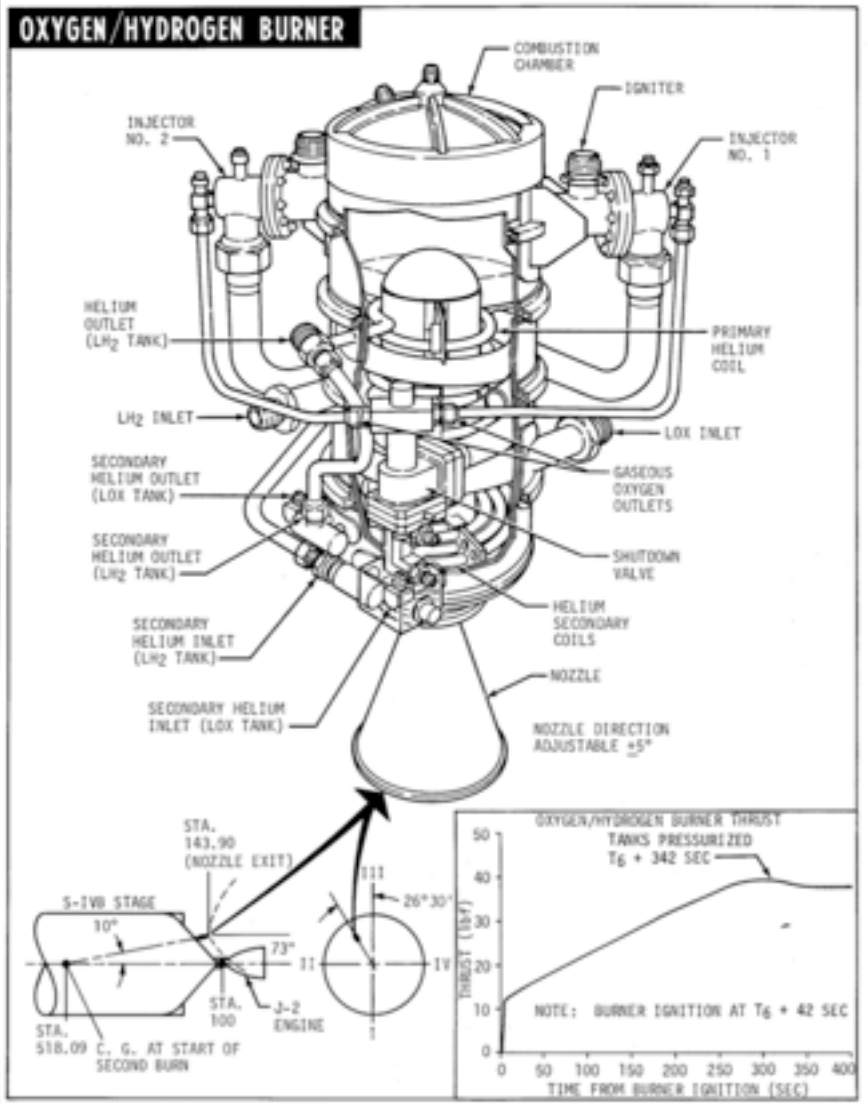

S-IVB Auxiliary Propulsion System

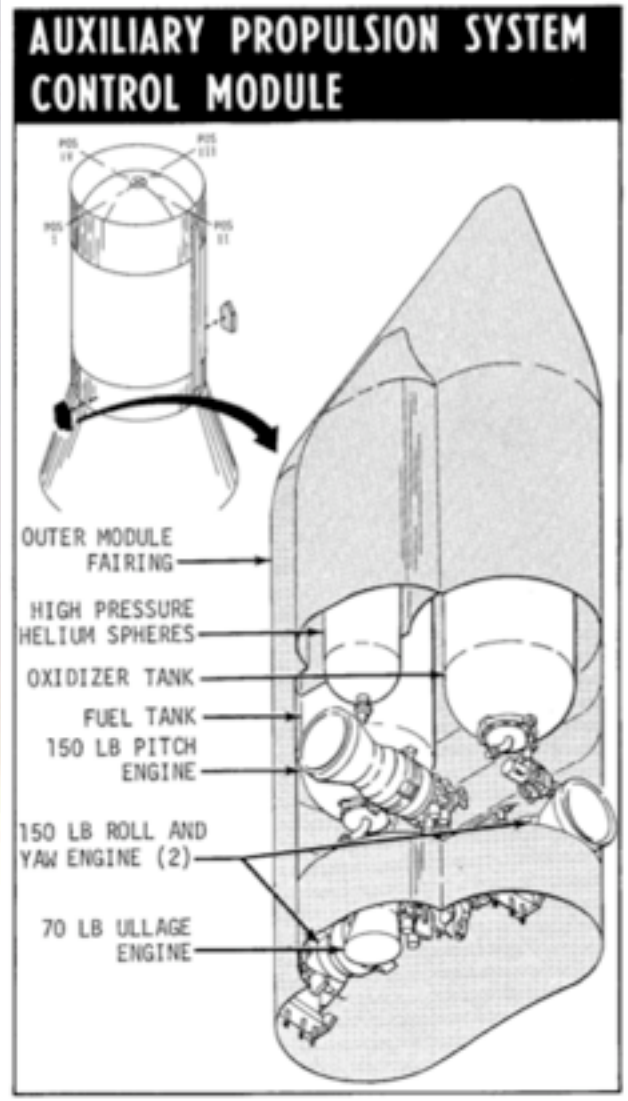

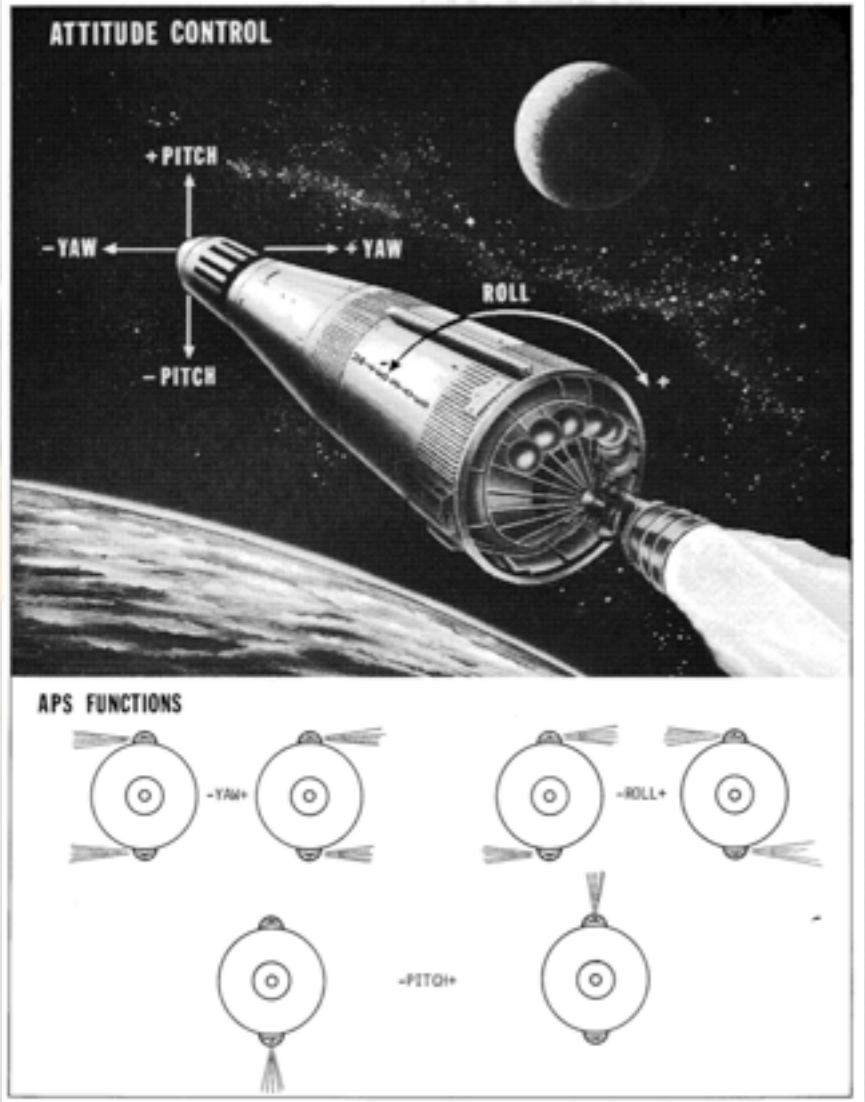

APS Plumbing and Control

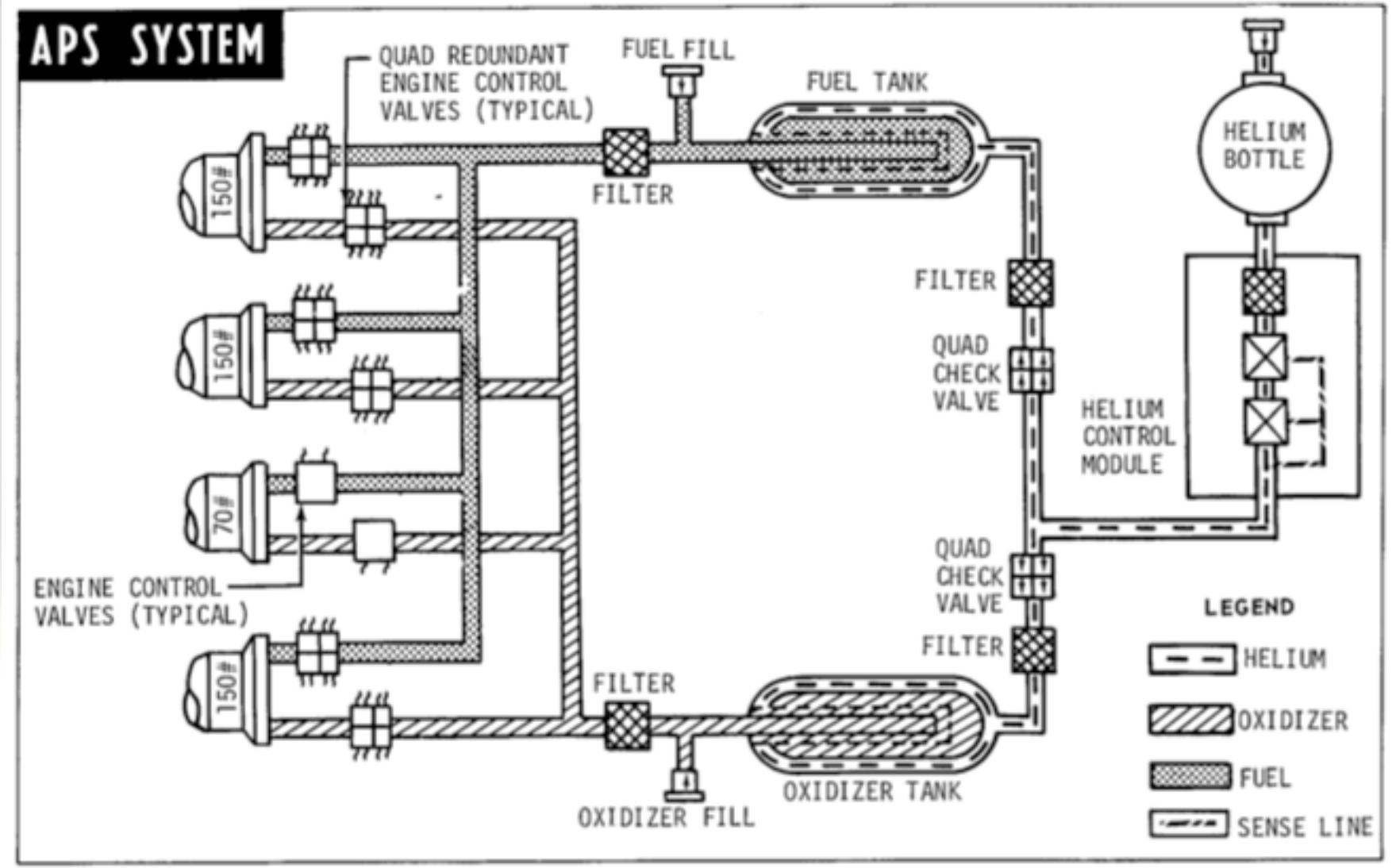

S-IVB Battery System

S-IVB BATTERY CHARACTERISTICS				
TYPE	Dry charge			
MATERIAL	Zinc/silver-oxide			
ELECTROLYTE	Potassium hydroxide (KOH) in pure water			
CELLS	20, with taps for selecting 18 or 19 to reduce output voltage as required			
NOMINAL VOLTAGE OUTPUT	1.5 vdc per cell 28 (±2) vdc per 18 to 20 cell group Aft Battery No. 2 is made up of two regular 28 (±2) vdc batteries and has an output of 56 (±4) vdc			
	FORWARD NO. 1	FORWARD NO. 2	AFT NO. 1	AFT NO. 2
CURRENT RATING	179 AH	12.2 AH	179 AH	49.6 AH
Gross Weight (Design target weight)	90 lbs	Two units: 20 lbs ea.	90 lbs	75 lbs

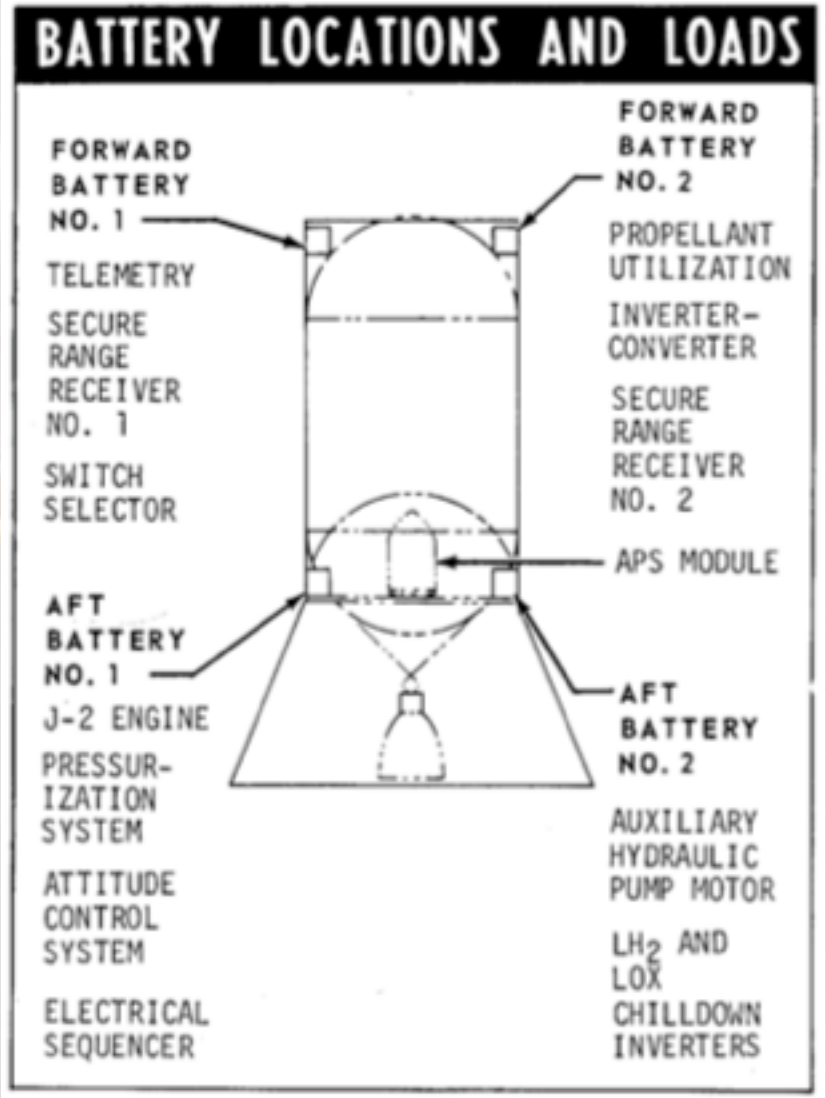

S-IVB Pyrotechnics

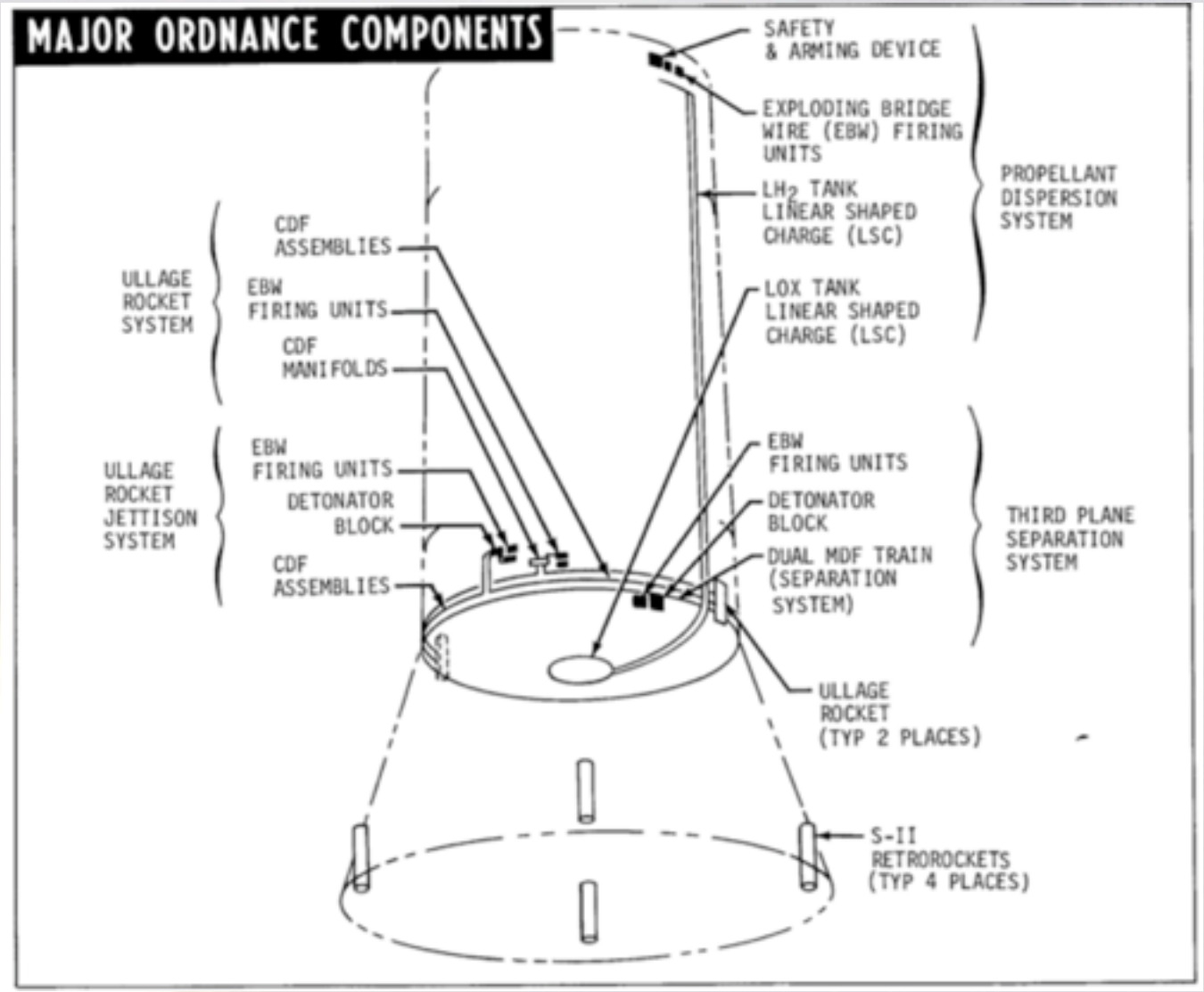

S-IVB Ordinance Control

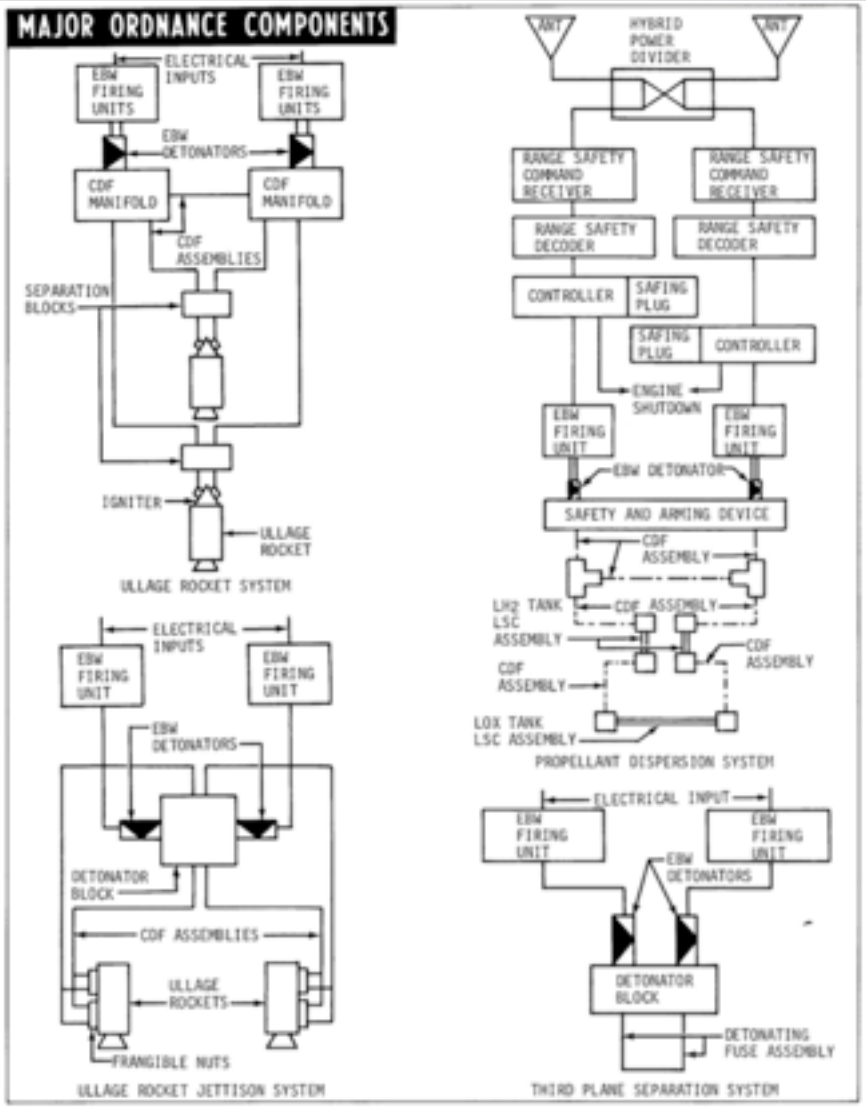

Saturn Instrument Unit

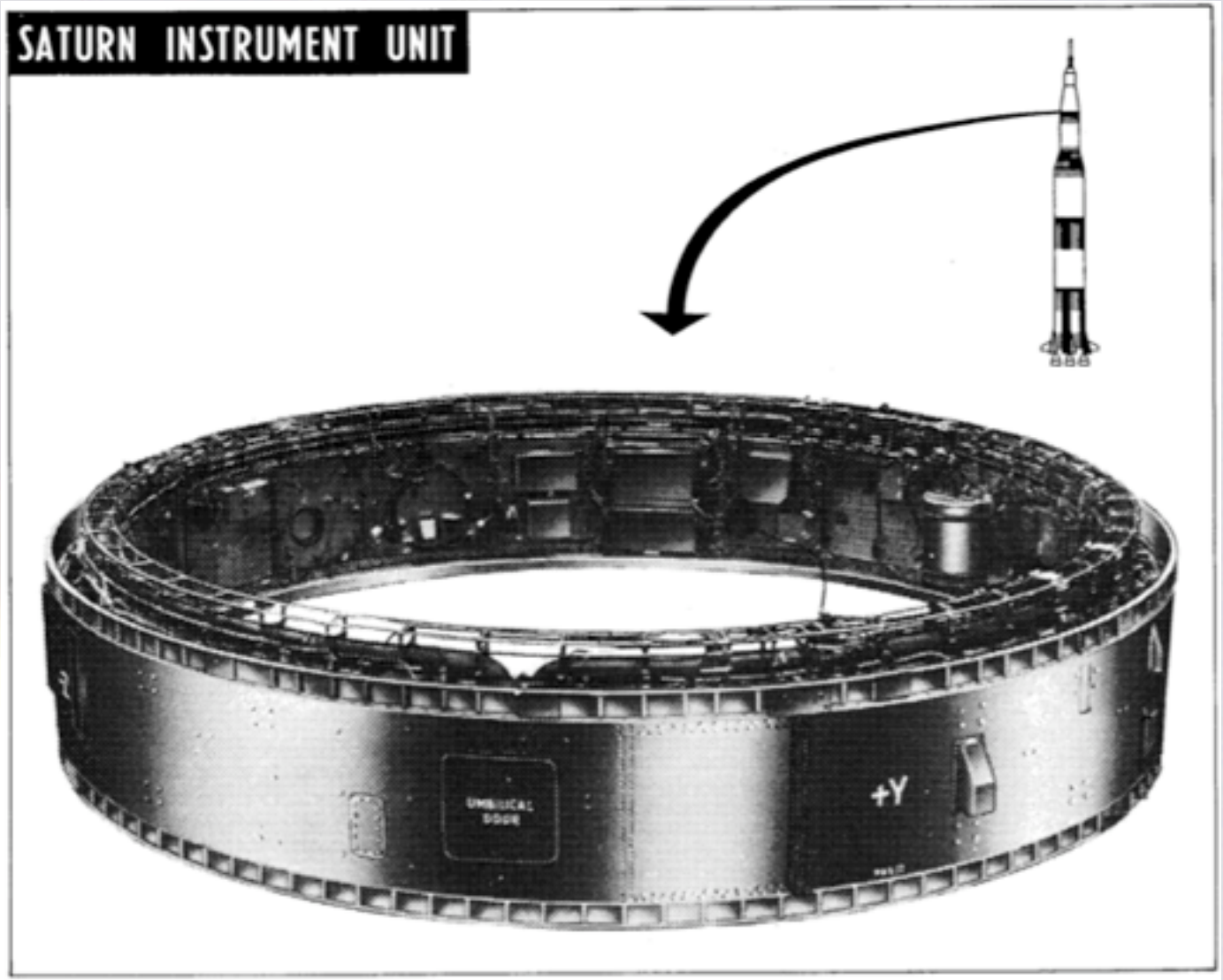

IU Structural Details

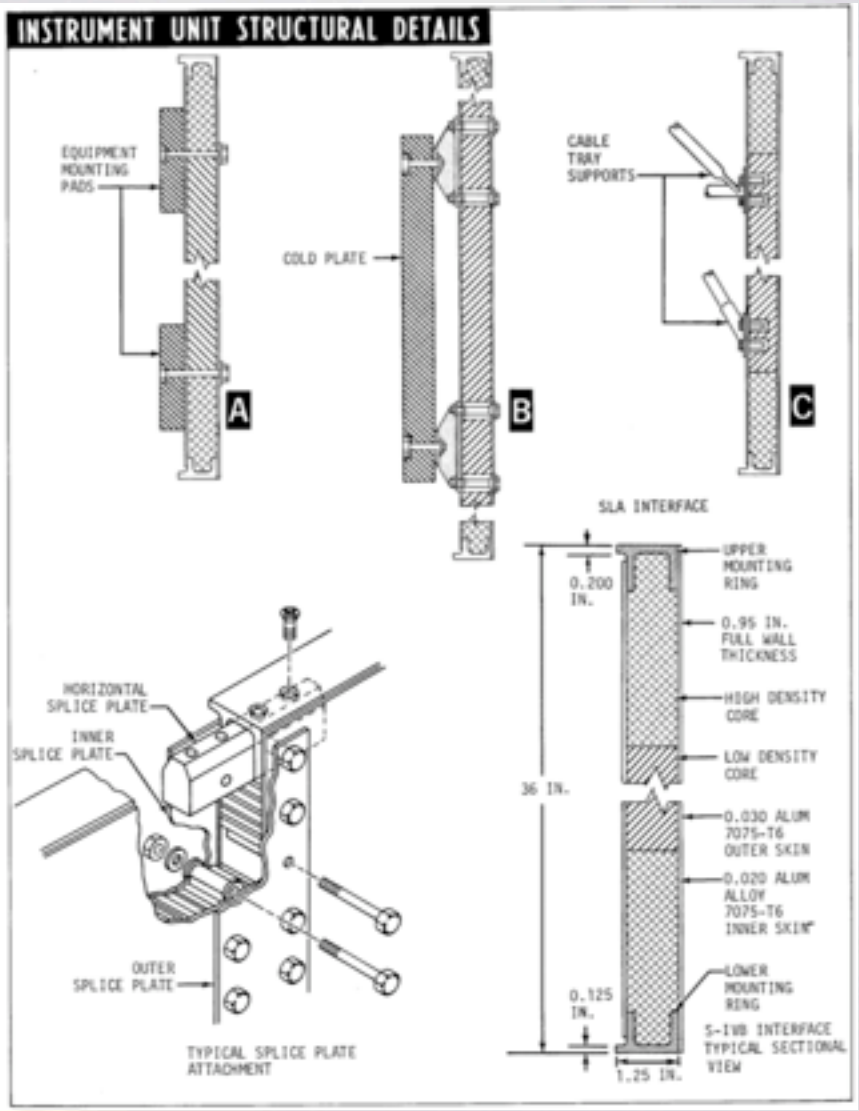

IU Equipment Locations

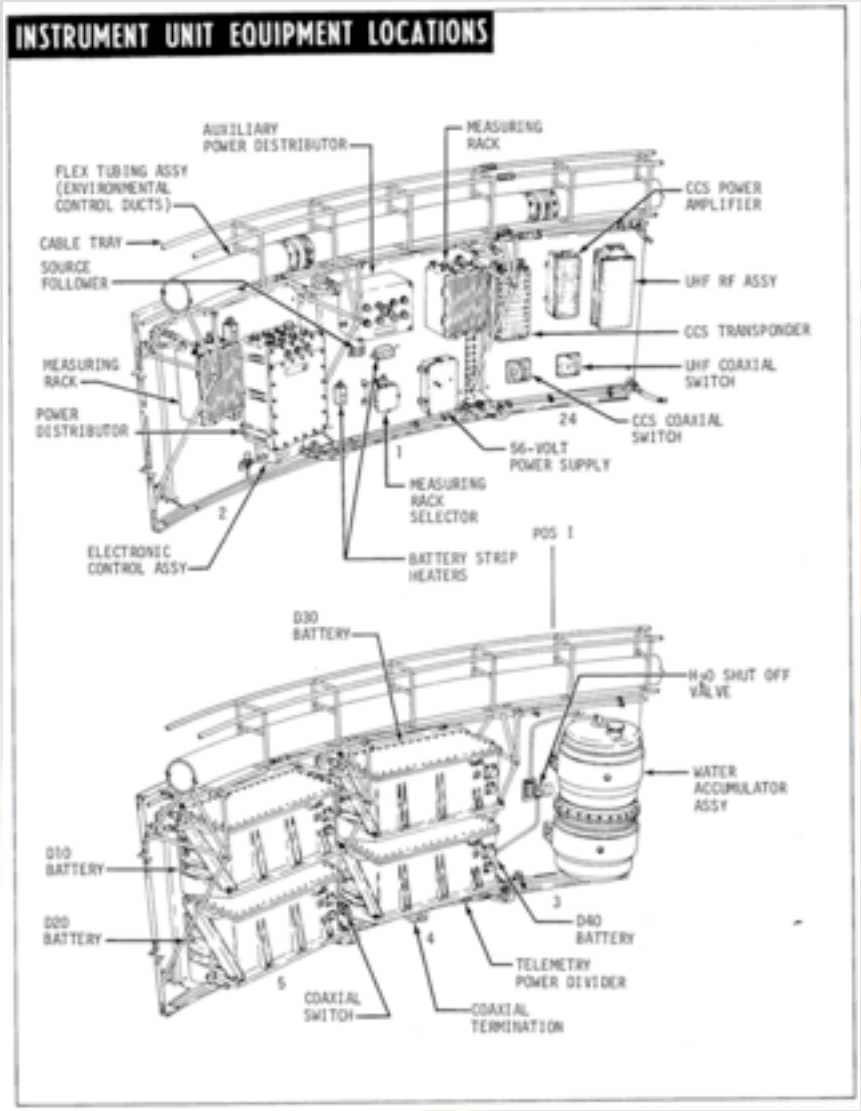

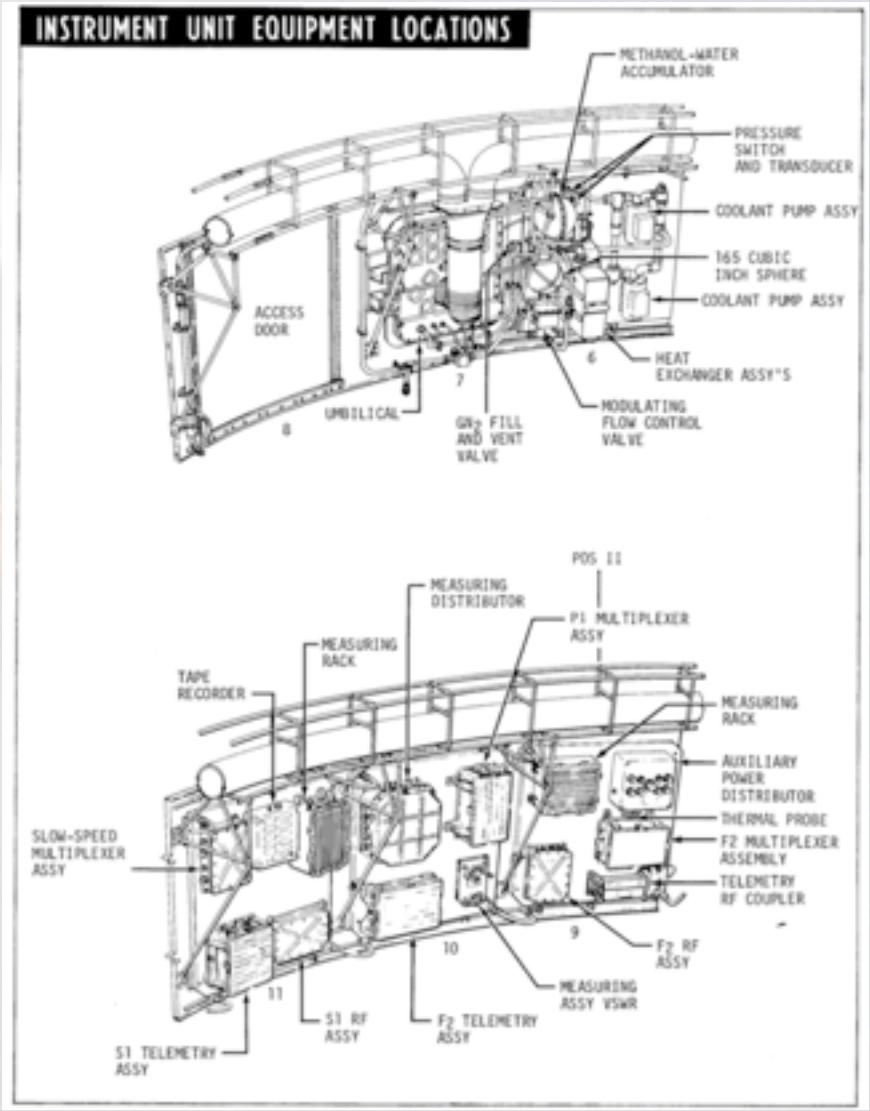

IU Thermal Conditioning System

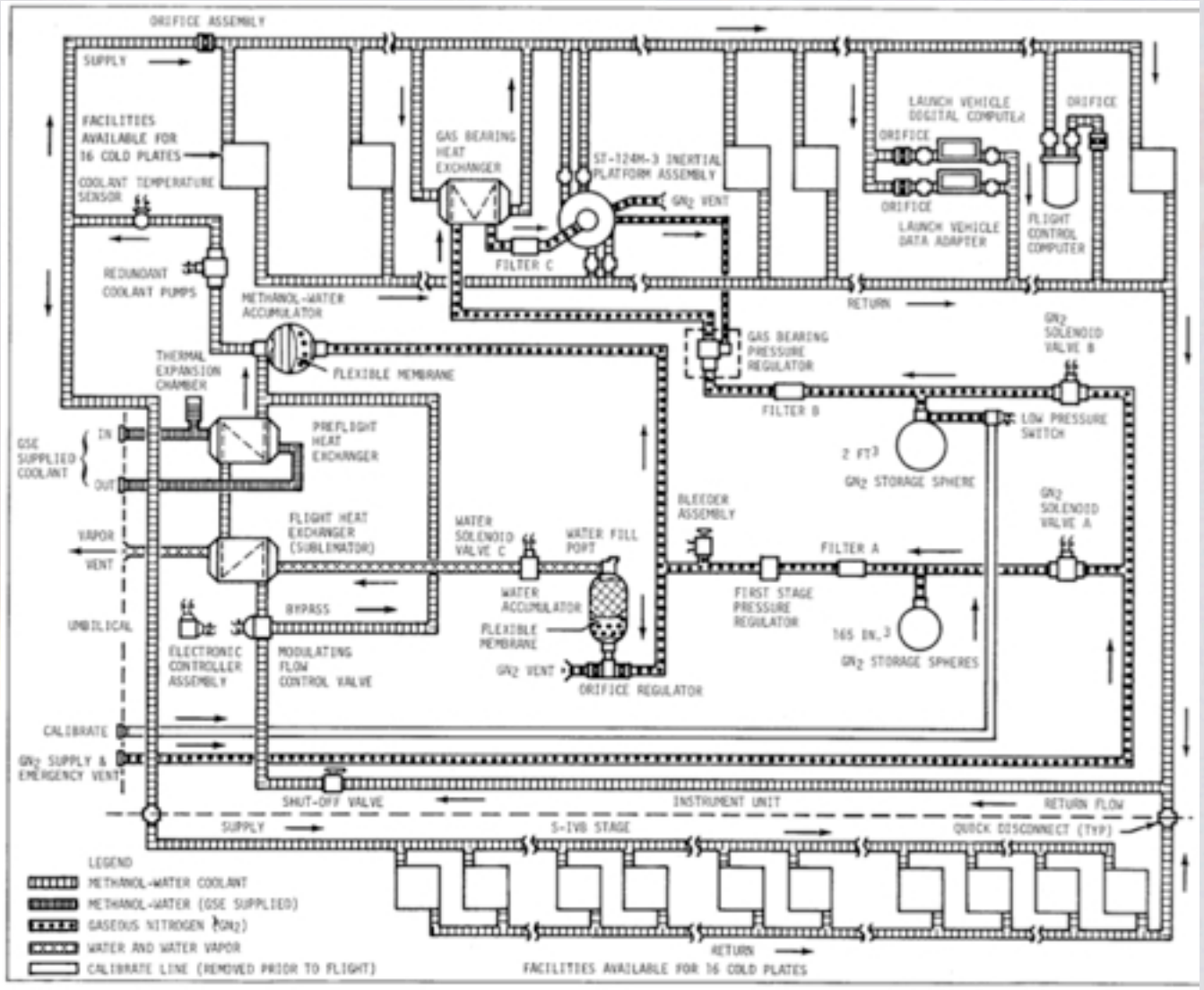

IU Thermal Conditioning Sublimator

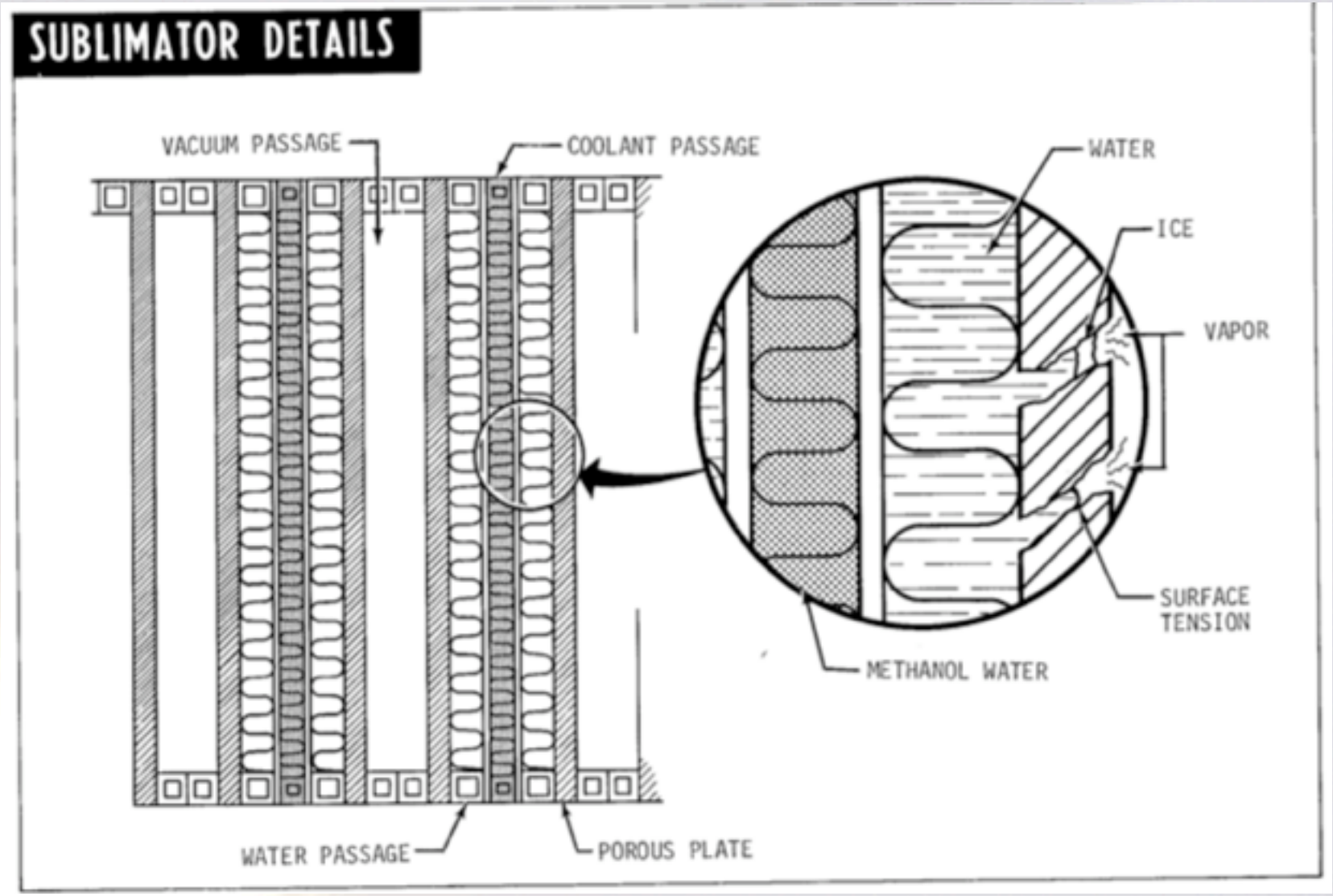

GN&C System Block Diagram

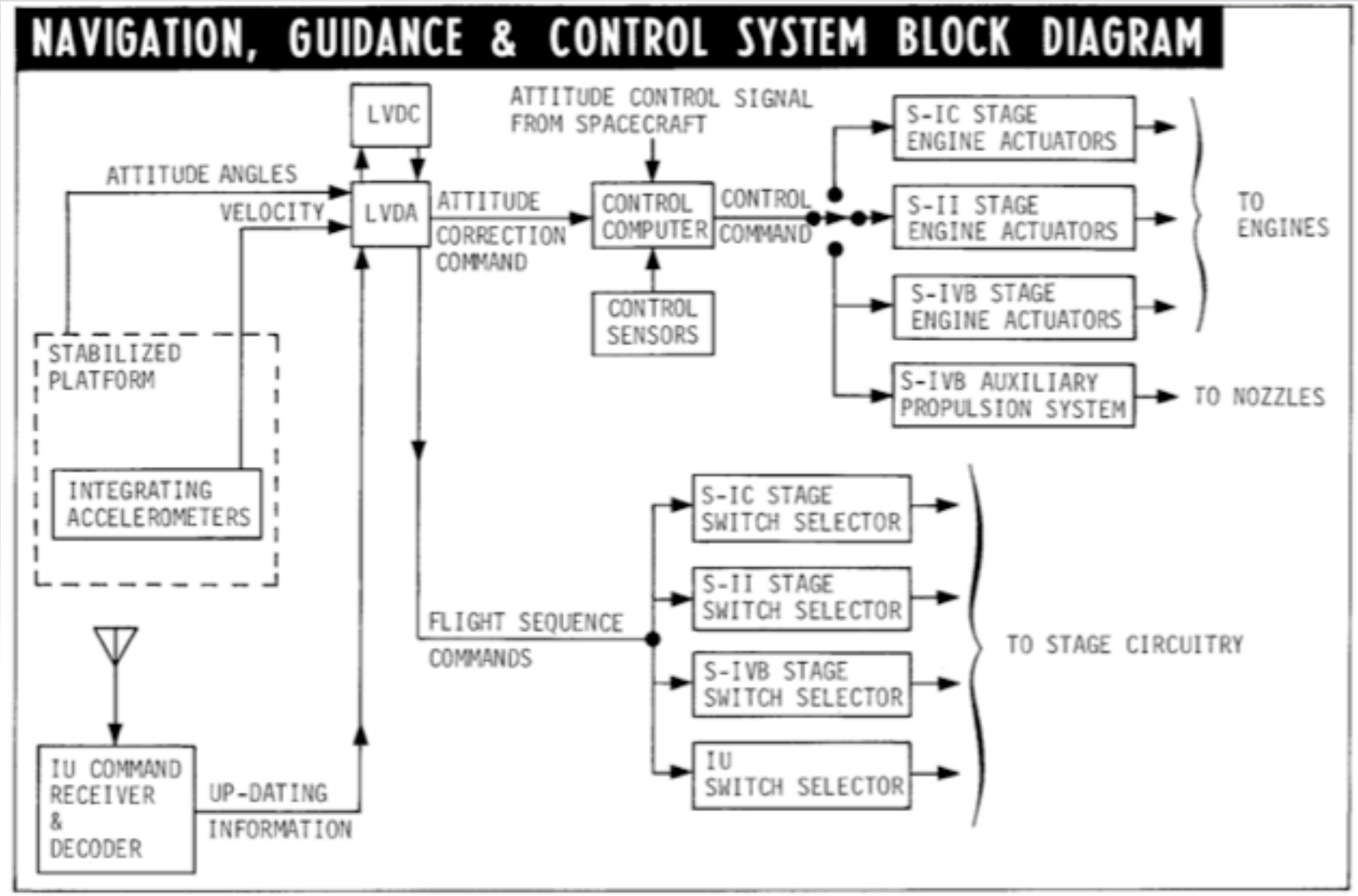

Vehicle Control Actuators

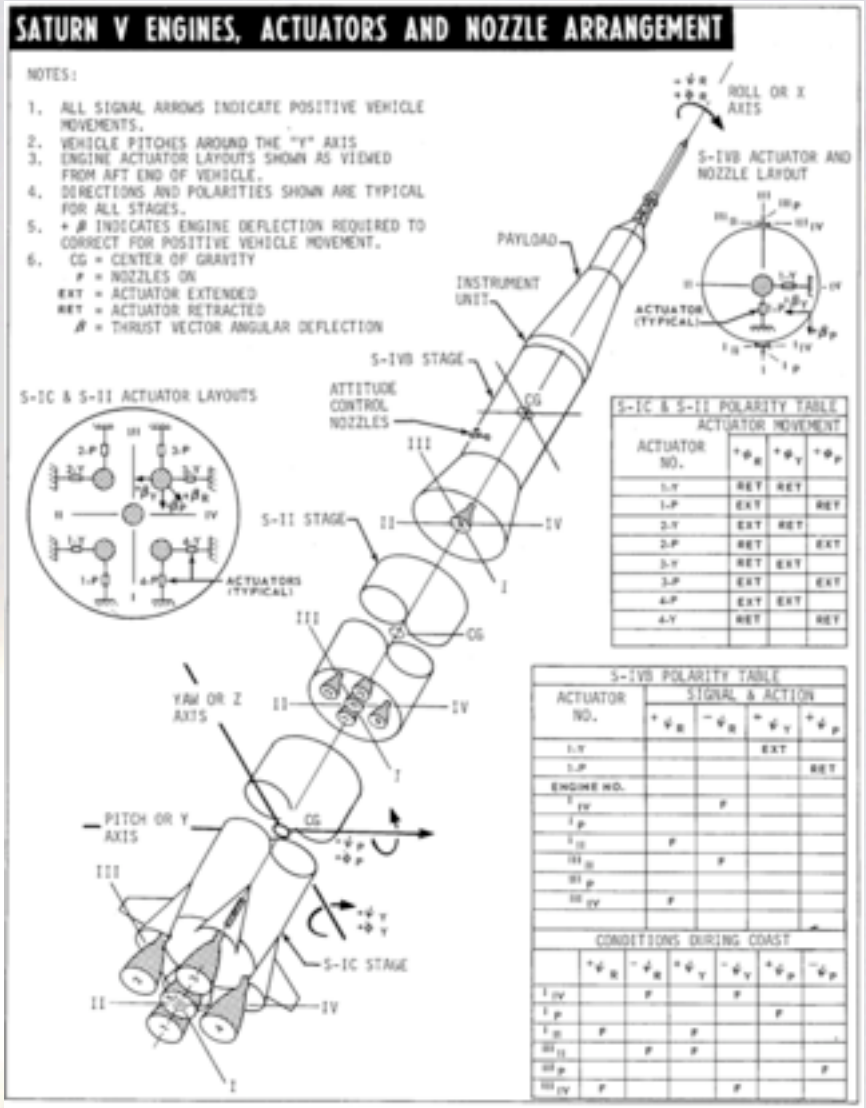

Ground Handling of Components

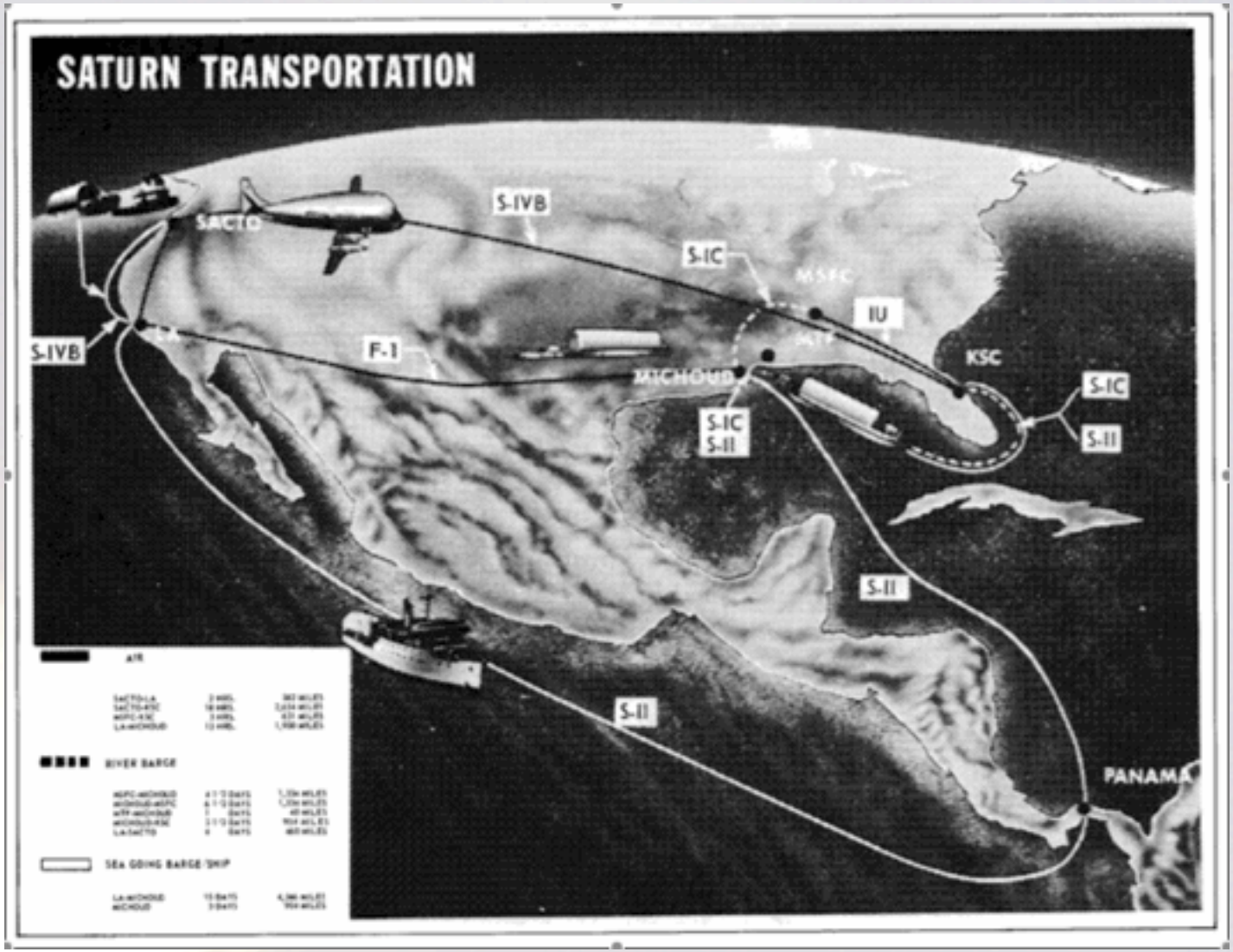

Launch Pad Interfaces

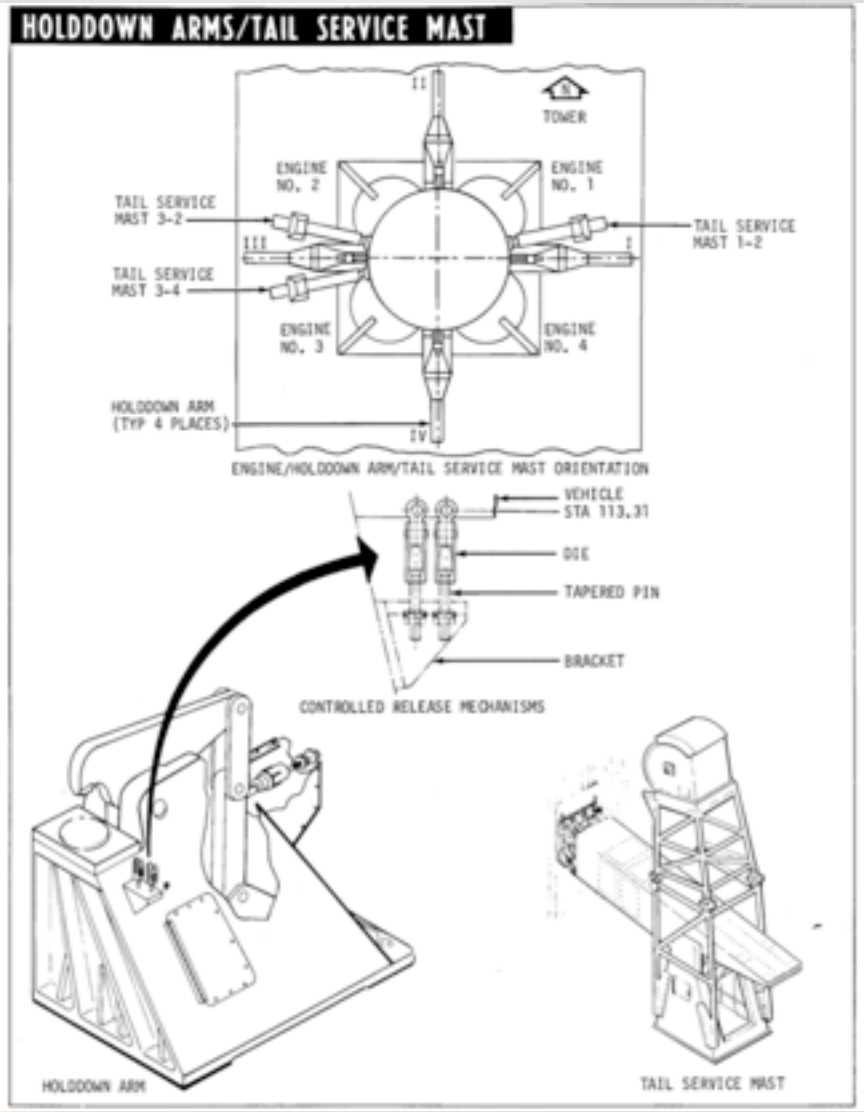

Emergency Pad Egress