# Space Station Phoenix

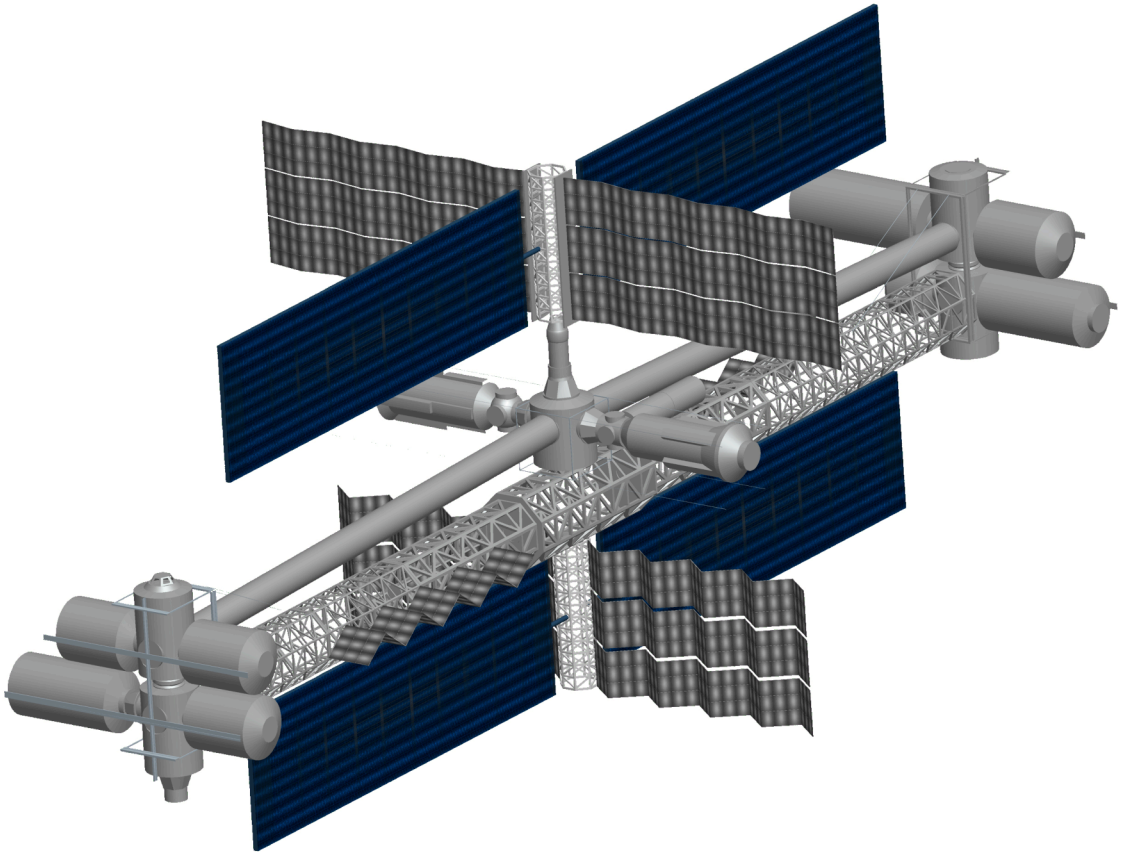

**ENES 484 Senior Design Project**
University of Maryland
Department of Aerospace Engineering
**Spring 2006**

# The Phoenix Project

**Preparing International Space Station to Support the Vision for Space Exploration**

**University of Maryland, College Park**

Team Members: Nicholas Akalovsky, Amanda Alessandra, Matthew Alvarado, Emin Azariah, Joel Blaine, Stephen Brookman, Lawrence Carroll, Avinash Chandra, Sara Corbitt, Aaron Eckert, Patrick Falini, Kelly Fields, Peter Gardner, Jason Hendrickson, Padraig Higgins, Andrew Howard, Jason Hubbard, Mark Kavlick, Shane Khoury, Jacob King, Ashley Korzun, Victor Ling, Adam Lloyd, Donald Mackey, Jeffrey Marquart, Megan Meehan, Rodderick Metzger, Amanda Moser, Christopher Moskal, Erin Needham, Nicholas Pappafotis, Paul Ries, Jason Robinson, Paul Rosendall, Kevin Schoonover, Mari Schroeder

Advisors: Dr. David Akin, Dr. Mary Bowden

## Abstract

By the time the United States' obligation to construct, supply, and support International Space Station expires in 2016, the U.S. will have invested more than $100B in the project. With the Vision for Space Exploration now driving the U.S. space program toward a return to the moon and eventual manned missions to Mars, current plans do not include maintaining ISS beyond this time. These planned long duration missions in partial gravity, particularly related to the design of a Mars transit vehicle, will require a deeper understanding of the physiological effects of a full duration Mars mission. The University of Maryland is proposing a program to convert ISS into a station capable of producing partial gravity and simulating a full duration Mars mission: Space Station Phoenix. SSP is a variable gravity habitat intended to recover a portion of the investment in ISS while supporting the long-term goal of a manned Mars mission.

# Summary Table of Contents

# Table of Contents

# Acronyms and Symbols

| | |
|---|---|
| $\alpha$ | Absorbance |
| $\sigma$ | Stefan-Boltzmann constant |
| $\varepsilon$ | Emmisivity |
| $\phi,\theta,\psi$ | 3-1-3 Euler orientation angles |
| 2/4BMS | 2 or 4 Bed Molecular Sieve |
| $A_i$ | Area Incident |
| ALS | Advanced Life Support |
| ALSS | Advanced Life Support System |
| AR | Air Revitalization |
| ARS | Air Revitalization Rack |
| BFO | Blood Forming Organs |
| BOL | Beginning of Life |
| CA | Central Axis |
| CCAA | Common Cabin Air Assembly |
| CEV | Crew Exploration Vehicle |
| CRA | Counter rotating assembly |
| CWS | Caution and Warning System |
| DSN | Deep Space Network |
| EMU | Extravehicular Mobility Unit |
| EOL | End of Life |
| ERA | European Robotic Arm |
| ESA | European Space Agency |
| EVA | Extra vehicular activity |
| FDS | Fire Detection and Suppression |
| GCR | Galactic Cosmic Radiation |
| GEONS | GPS-Enhanced Orbit Navigation System |
| GLONASS | Global Orbiting Navigation Satellite System |
| GPS | Global Positioning System |
| HDPE | High Density Polyethylene |
| HDTV | High Definition Television |
| HEPA | High Efficiency Particulate Assembly |
| HSF I | Human Research Facility I |
| $I_{xx}, I_{yy}, I_{zz}$ | Principal moments of inertia |
| $I_s$ | Insolation Constant |
| IMV | Inter Module Ventilation |
| ISS | International Space Station |
| JEM | Japanese Experimental Module |
| JEM-ELM-PS | Japanese Experiment Module – Pressurized Section |
| JEM-PM | Japanese Experiment Module – Pressurized Module |
| JSC | Johnson Space Center |
| L1 | First Lagrange Point |

| | |
|---|---|
| LEO | Low Earth Orbit |
| LH2 | Liquid Hydrogen |
| LOX | Liquid Oxygen |
| M | Mass |
| MBS | Mobile Base System |
| MCA | Mass Constituent Analyzer |
| MDM | Multiplexer/Demultiplexer |
| mg | Milli-grams |
| MLM | Multipurpose Laboratory Module |
| MOL | Manned Orbiting Laboratory |
| MPLM | Multi Purpose Logistics Module |
| MSS | Mobile Servicing System |
| MMS | Mars Mission Simulation |
| MMH | Monomethylhydrazine |
| NASA | National Aeronautics and Space Administration |
| NC | Noise Criteria |
| $N_2O_4$ | Nitrogen Tetroxide |
| OGS | Oxygen Generation System |
| OME | Orbital Maneuvering Engine |
| $P_{int}$ | Internal Power |
| PBA | Portable Breathing Apparatus |
| PCA | Pressure Control Assembly |
| PDGF | Power Data Grapple Fixture |
| PDR | Preliminary Design Review |
| PFE | Portable Fire Extinguisher |
| PLSS | Portable Life Support System |
| PMA | Pressurized Mating Adapter |
| R | Radius |
| RGA | Rate Gyro Assembly |
| RLG | Ring Laser Gyro |
| RM | Russian Research Module |
| RMS | Remote Manipulator System |
| R/P | Receiver/Processor |
| RPM | Revolutions per minute |
| SA | Surface area |
| SAA | South Atlantic Anomaly |
| SPDM | Special Purpose Dexterous Manipulator |
| SPE | Solar Particle Events |
| SPWE | Solid Polymer Water Electrolysis |
| SSP | Space Station Phoenix |
| Sv | Sievert |
| T | Temperature |
| $T_{env}$ | Environment Temperature |
| $T_x, T_y, T_z$ | Torques about axes |
| TCCS | Trace Contaminant Control System |
| TDRSS | Tracking and Data Relay Satellite System |

| | |
|---|---|
| THC | Temperature Humidity and Control |
| $x, y, z$ | Position of center of mass |
| $v_x, v_y, v_z$ | Velocity of center of mass |
| VGT | Variable Gravity Testing |
| VR | Virtual Reality |
| $w_x, w_y, w_z$ | Angular velocities about axes |
| WCS | Waste Collection System |

# I. Introduction

## 1.1 Description

SSP is an ISS-derived orbital laboratory for studying the effects of partial gravity on physiology and simulating a full duration manned Mars mission in support of the Vision for Space Exploration Mars initiative. Each crew of six astronauts is comprised of two pilots, two scientists, an engineer, and a physician. The motivation for SSP is to fill the gaps in knowledge about human physiology and mission operations in partial gravity, with a strong emphasis on operations at Mars gravity. There has been over $120B invested in the ISS by various countries. By reusing ISS components a large amount of that investment will be transferred to the Phoenix project, thus driving down the total project cost.

## 1.2 Design Constraints and Top Level Requirements

The SSP concept is driven by 27 externally applied design requirements, the most significant of which are listed below:

- SSP must be capable of a 3-year Mars mission simulation without re-supply, including EVA and emergency operations.
- SSP must be used to study the effect of partial gravity at levels varying from 0 to 9.8 $m/s^2$ for a crew of 6.
- SSP must use as many components from ISS and other NASA programs as possible, and all launch operations must use American launch vehicles.
- SSP must use references NASA-STD-3000, NASA-STD-5001, and NASA-STD-5002, to design for crew habitability and structural integrity.
- SSP construction begins on January 1, 2017, with a full-duration Mars mission simulation to be completed by January 1, 2027.
- Total SSP costs must be less than $20B (FY06).
- SSP nominal operating costs, including launch and in-space transportation, must be no more than $1B (FY06) per year after construction.

## 1.3 Station Overview

Space Station Phoenix is composed of five main components: Townhouse A, Townhouse B, the central hub, the inertial caps, and two transfer tubes. The "townhouses" are the primary living and working areas of the station and are made up primarily of ISS modules, but are augmented by structural reinforcement. These structures are located at opposite ends of the station and connected to the central hub by transfer tubes through which the crew can move between the townhouses and the central hub. The transfer tubes are completely new and will have to be designed and manufactured. The central hub of the station consists of a node and two re-used ISS modules. This area is primarily for storage and for providing stability. In addition, the townhouses, transfer tubes and, central hub are all rotating. Perpendicular to the plane of

rotation are the inertial caps, which do not rotate and contain all the parts of SSP that cannot rotate. The non-rotating parts include the docking ports, maneuvering thrusters, communication antennae, solar panels, and most of the radiators for SSP.

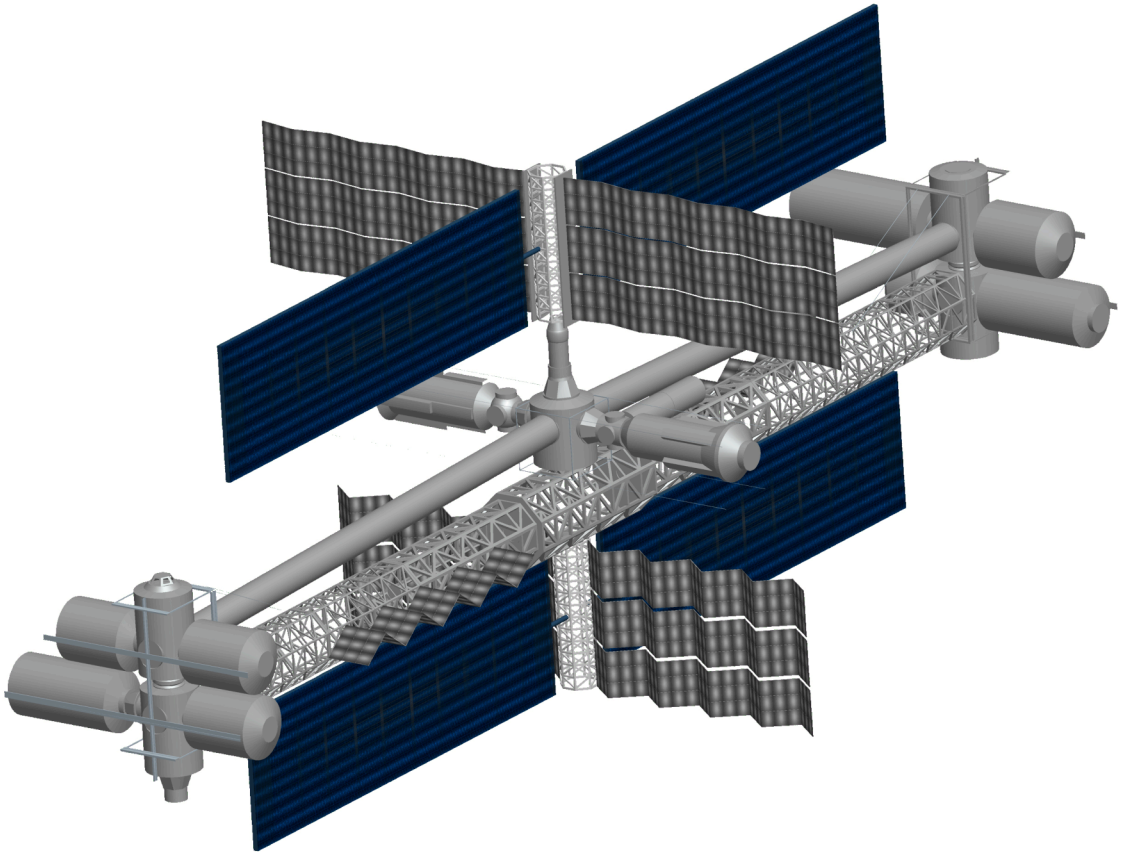

# II. Configuration and Station Design

## 2.1 Choosing a Comfortable and Practical Rotation Rate

***(Rosendall)***

The decision to use a partial gravity environment for the astronauts means that SSP needed to be a spinning station. Studies were examined that show the acceptable range of rotation rates for humans. Coriolis forces due to rotation create cross-coupled angular accelerations in the ear canal when the head is turned out of the plane of rotation. Motion sickness results even at low spin rates, though humans can adjust to rates below 3 rpm after extended exposure.[1] Other studies show that humans develop debilitating sickness in atmospheres with rotation above 2 rpm.[2] More recent studies show that rotations of 4 to 10 rpm, coupled with adjustments made by the astronauts during spin-up, are acceptable for SSP.

***(Chandra)***

In order to simulate partial and full gravity, SSP needs induce angular acceleration about its central axis. Artificial gravity has never been simulated on a large scale in space, and research conducted into the effect of rotational acceleration rates on human beings has been limited. While undergoing rotational acceleration, the human vestibular system and ocular system is what the brain uses to gauge spatial orientation. Under Coriolis acceleration forces induced by increasing rates of rotation, humans become physically uncomfortable. In the 1960s, research conducted in a 'slow rotation room' at the Naval Aerospace Medical Research Laboratory in Pensacola, Florida determined that human beings were comfortable and could work normally at up to 4 revolutions per minute (RPM). Research conducted up to 2003 by the Graybiel Institute at Brandeis University has indicated that humans can tolerate up to 10 RPM, as long as Coriolis forces are mitigated by rapid head movements during the run up to the desired rotation rate.

Based on this research, 4.5 RPM is SSP's maximum rotation rate to strike a balance between providing a comfortable habitat and work environment to the crew and minimizing the size of the rotating arms.

## 2.2 Station Configuration (Howard)

Space Station Phoenix needs to simulate variable gravity by spinning. This requirement produces the need to drastically change the configuration of the International Space Station to create Space Station Phoenix. The need to spin the station leads to three main configurations that will be examined: a full wheel, a three spoke approach, and a dumbbell approach. The three configuration's volumes, masses, and costs are calculated

---

[1] Burgess, E. Rotating Space Station Could Be Made Livable for Crew, The Christian Science Monitor, Boston, Mass., March 18, 1970, p. 15.

[2] Hon, Adrian. Astrobiology, The Living Universe: Artificial Gravity. 2001. http://www.ibiblio.org/astrobiology/index.php?page=adapt06.

to determine which configuration produces the best results for Space Station Phoenix based on the level one requirements. These three configurations were chosen because they represent three distinct ways of solving the problem, and should therefore give a solid idea of which configuration would be the most feasible. If the configurations are compared in top level design, the configuration that is the most feasible will still be the most feasible when the design is done in greater detail.

### *2.2.1 Volume Comparisons*

One of the criteria for designing Space Station Phoenix is to make the useable space on the station as close to the minimum required amount as possible. This leads to reductions in mass and cost to produce a more feasible space station. Every amount of floor space that is added produces more mass that is not absolutely necessary and will require more propellant to move the station, thus adding more cost to the station.

For the maximum stay on Space Station Phoenix of three years, it is required that each crew member have 3.3 $m^2$ of personal space and 1.4 $m^3$ per person for personal storage. After adding the space for food, systems, and shared space for living and science this gives a minimum volume of 250 $m^3$ for Space Station Phoenix.

For the dumbbell and three spoke configurations the amount of space can be controlled by the number of modules that are reused from the ISS. The ability to control the size of the station produces close to the minimum amount of floor space for SSP.

On the other hand, a full wheel approach is not volume efficient. A full wheel with a radius of 37.5m produces a circumference of 235 m, and if the wheel is completed with ISS modules or inflatables this will produce a volume of roughly 350 $m^3$. This is roughly 40% more than the minimum amount of space that is required. This 40% increase in volume produces unnecessary space, and in the design of the station anything that is not necessary should be eliminated. The extra 40% provides no benefits to Space Station Phoenix, and is not necessary so if it can be eliminated or significantly reduced it should.

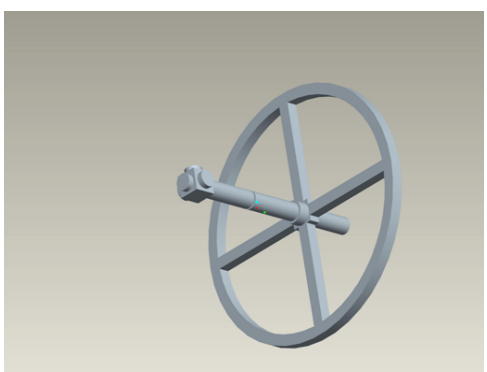

Fig.2.2.1 Full Wheel Configuration

### *2.2.2 Mass Comparisons*

The mass of the station is the defining criteria for designing a space station and should be minimized for optimum feasibility.

Space Station Phoenix will be spinning, so it is extremely important that the center of gravity is in the correct location and has moments of inertia that result in a stable spin. For a spinning station with three distinct moments of inertia it will be stable to small perturbations if it spins about it largest or smallest moment of inertia and if two are the same it will be stable if it is spinning about the unique moment of inertia[3]. For the crew to experience the artificial gravity they need to be in the rotational plane. Because of this the station will be spinning about the largest moment of inertia in all configurations. The full wheel approach will provide a stable spin as seen in equations 2.2.1 and 2.2.2[4].

$$I_{xx} = \frac{1}{8}(5a^2 + 4c^2)M = I_{yy} \qquad \text{Eq. (2.2.1)}$$

$$I_{zz} = (\frac{3}{4}a^2 + c^2)M \qquad \text{Eq. (2.2.2)}$$

The three spoke configuration with 60° or 120° separation between the Townhouses will have a stable spin as well as seen in equations 2.2.3 through 2.2.5.

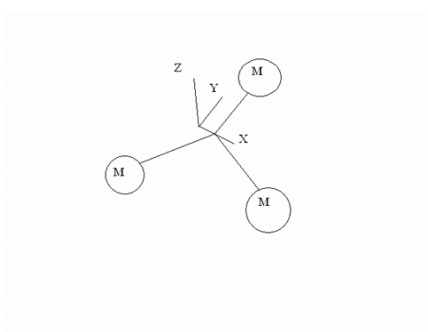


Fig. 2.2.2 Three Spoke Configuration

[3] Fitzpatrick, Richard. "Rotation Stability." 02 Feb. 2006. University of Texas. Mar. 2006 < http://farside.ph.utexas.edu/teaching/336k/lectures/node74.html>.

[4] Weisstein, Eric. "Moments of Inertia-Ring." 2006. World of Physics. Mar. 2006 <http://scienceworld.wolfram.com/physics/MomentofInertiaRing.html>

$$I_{zz} = 3MR^2 \qquad \text{Eq. (2.2.3)}$$

$$I_{xx} = MR^2 + 2MR^2 \sin(\theta) \qquad \text{Eq. (2.2.4)}$$

$$I_{yy} = 2MR^2 \cos(\theta) \qquad \text{Eq. (2.2.5)}$$

The dumbbell approach will not have a stable spin unless small stability arms are added to the station as can be seen in equations 2.2.6 and 2.2.7.

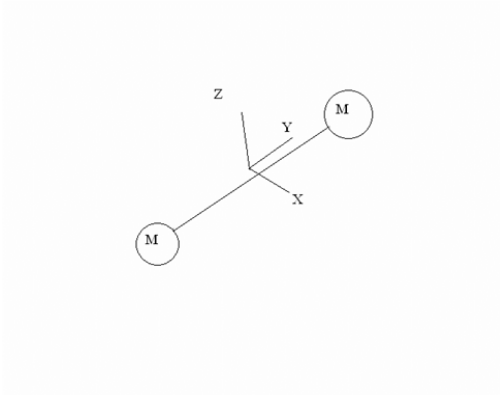


Fig. 2.2.3 Dumbbell Configuration

$$I_{zz} = 2MR^2 = I_{xx} \qquad \text{Eq. (2.2.6)}$$

$$I_{yy} = 0 \qquad \text{Eq. (2.2.7)}$$

When adding in the stability arms the percent difference between the largest and middle moments of inertia was examined for margins of 1%, 5%, and 10%. At these different stability margins the mass of the small stability arms is found at varying radii for the small stability arm from one tenth of the large radius out to the length of the large radius.

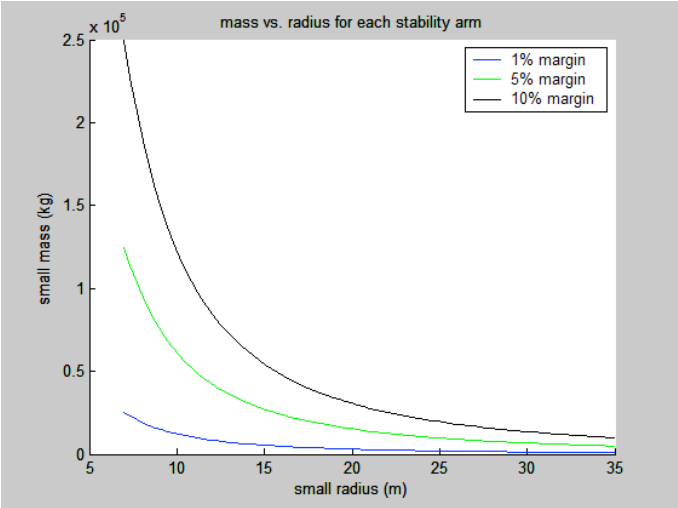


Fig.2.2.4 Stability arm mass at various radii

| Table 2.2.1 Stability arm and station mass at various radii | | | | | | |
|---|---|---|---|---|---|---|
| | Small stability mass (kg) | | | Station Mass (kg) | | |
| | 1% | 5% | 10% | 1% | 5% | 10% |
| R=10m | 12,700 | 63,700 | 127,500 | 339,600 | 441,700 | 569,200 |
| R=15m | 5,400 | 27,000 | 54,000 | 333,300 | 376,300 | 430,400 |
| R=20m | 3,000 | 15,300 | 30,700 | 335,900 | 360,600 | 391,400 |
| R=25m | 1,900 | 9,900 | 19,800 | 341,300 | 357,200 | 377,000 |
| R=30m | 1,300 | 6,600 | 13,500 | 348,200 | 359,000 | 372,500 |
| R=35m | 1,000 | 5,000 | 10,000 | 355,000 | 363,000 | 373,000 |

The stability arm configuration and the three spoke approaches are compared. This is done by assuming Townhouse A is on one side and Townhouse B is on the other side, and assuming that each has a mass of 100,000 kg based on the masses of the modules being used and adding in an extra 20,000-15,000 for extra things such as connection/support trusses, thrusters, etc. The radius of the long arms is assumed to be 35m with a truss that has a mass of 27,000kg and the mass of the central axis at 145,000kg. For the three spoke configuration the Townhouse mass is also assumed to be 100,000kg each and is also looked at for masses of 75,000kg each. The mass of an extra truss was added in and the mass of the central axis was kept the same.

For almost all of the small arm radii configurations at 5% and 10% the mass of the station with the small stability arms is less than the mass of the station with three spokes. Because of the need to reuse ISS parts and reduce the amount of new components to launch, the stability percent will be closer to 1% and in this case the mass of the station in the dumbbell with stability arms configuration is always less than the three spoke configuration.

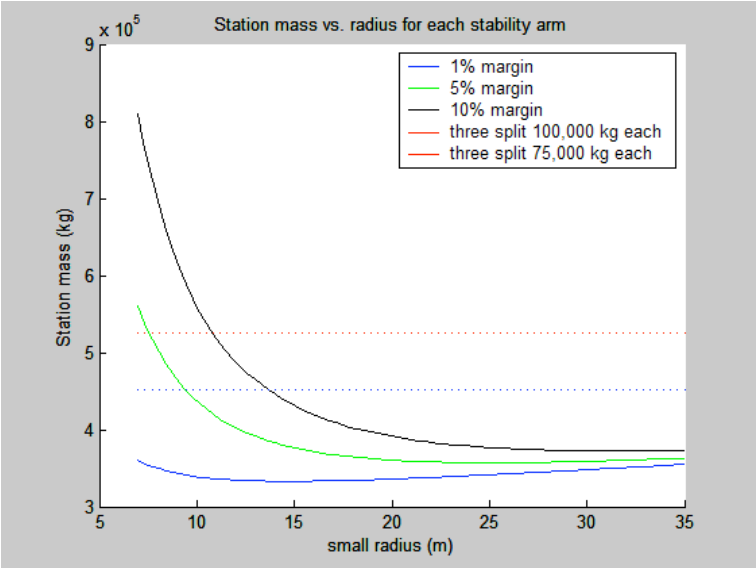

Fig. 2.2.5 Stability Arm Radii

### *2.2.3 Cost Comparisons*

Space Station Phoenix is being designed to provide a low cost solution to extend the usefulness of the ISS after the United States is done with its commitment. With a strict budget of $20B the configuration needs to be cost effective, and all costs should be kept to a minimum whenever possible. With the high cost per kg to launch payloads into space, a configuration that yields the least new components to launch is desired.

A full circle configuration is not beneficial from a cost viewpoint because it requires the launch of roughly 10 new ISS modules or 50 m of inflatables to complete the circle. This leads to many more launches than with other configurations and at about $175M per launch depending on which Delta IV is used this quickly adds up. Also, there needs to be four trusses from the central axis out to the circular section of the station. This adds more truss length than can be reused from the ISS, and adds more launches and again drives up the cost. Because the truss needs to be created there would be manufacturing as well as research and development costs that would add more unnecessary expense and run the program over budget.

The three spoke configuration is an improvement over the full circle approach because it uses only three truss arms and does not require many new ISS modules or inflatables. This is the main advantage for the other configurations when compared to the full circle approach. These advantages will save hundreds of millions of dollars compared to the full wheel because new ISS modules or inflatable structures will not need to be launched. For the three spoke approach there are three trusses out to the arms. This is still more than can be reused from the ISS and will add some cost but has a minimal impact when compared with the cost savings of not launching new components.

The dumbbell approach is very similar to the three spoke approach in that it reduces the number of ISS components to a minimum and has the advantage of only needing two trusses out to the Townhouses. This means that not as much truss needs to be developed

and launched. Most of the truss can be reused from the ISS and this represents a savings when compared with the three spoke configuration. The stability arms do not add significantly to the cost of the station. This is because the stability arms can be made from existing ISS parts and other components that can act as the stability arms. This configuration will produce the lowest cost and that is one of the major factors in the design of Space Station Phoenix.

### *2.2.4 Decision*

After examining the three station configurations, the dumbbell with stability arms was decided on for Space Station Phoenix. This choice was an easy one to make because of its advantages in volume, cost, and mass. The full wheel design was quickly disregarded because of the larger than necessary volume to complete the ring, therefore it was an unfeasible choice. This left the three spoke approach and the dumbbell with stability arms approach to choose from. The three spoke configuration was disregarded because it was more massive and costs more to create than the dumbbell configuration. However, there was still the problem of possible instability in the dumbbell approach. After further examination it was decided that the station could be designed to meet any instability needs and the savings in mass and cost make this worth the risk.

## 2.3 Trade Study: Wheel vs. Counterweight (Moser)

One of the design trade-offs for Space Station Phoenix is whether or not it should be designed with counterweight or as a wheel. Both designs would create a variable gravity environment without requiring the crew to pass through the lower gravity sections of the station on a regular basis. Both designs allowed multiple routes from the habitable sections to the CEV escape vessel docked to the central axis. A trade study was conducted between the two designs. A summary of the pros and cons can be found in the table below.

Table 2.3.1:

| | Wheel | Counterweight |
|---|---|---|
| Pros | • Large floor area would allow plenty of room for the crew to grow accustomed to long walks in Mars gravity<br>• Multiple routes to the central axis | • Most of the habitable volume would be in the townhouses, not in the corridors between them<br>• Multiple routes to the central axis |
| Cons | • Low compatibility with ISS and lots of new mass that needs to be designed and launched<br>• More volume than needed with a spin rate of 4 to 6 rpms<br>• Extra volume is mostly corridor and not very useable. | • Large number of EVAs to assemble<br>• Need to develop ways to connect all the pieces together<br>• Insufficient “unused” ISS mass to create counterweight |

## 2.4 Trade Study: Counterweight vs. Dumbbell (Moser)

One of the design trade-offs for Space Station Phoenix is whether or not it should be designed with a counterweight. Originally it was believed that forcing the crew to pass through the 0 g section everyday would mean that the Level 1 requirement for simulating Mars gravity would not be met. The alternative of having two teams the three, each living on their own side of the station would also be unacceptable. Therefore the concept of a counterweight was employed early in the design process. This way the crew would not have to pass through different gravity levels every day in order to go between personal tasks and scientific experiments. It was later pointed out that having the crew pass through the lower gravity sections briefly should not adversely affect the study of artificial gravity. A trade study between the counterweight design and a new design was necessary.

The trade study between the PDR design and the new "dumbbell" shaped design, Space Station Phoenix's current configuration, was conducted. A summary of the pros and cons of each choice can be found in the table below.

Table 2.4.1:

| | Counterweight | Dumbbell |
|---|---|---|
| Pros | • Habitable modules are close together<br>• Could re-use even broken ISS parts and launch casings<br>• Multiple routes to the central axis and townhouses | • Much lower launch costs due to lower overall mass<br>• Space efficient (no "dead weight")<br>• All portions of the station are shirtsleeve accessible |
| Cons | • Higher launch costs due to higher overall mass<br>• Large number of EVAs to assemble<br>• Need to develop ways to connect all the pieces together<br>• Insufficient "unused" ISS mass to create counterweight | • Habitable modules separated by zero g section<br>• Needs additional aid to be stable (stability arms)<br>• Changing the location of the center of mass involves shifting objects needed by the crew instead of shifting counterweight |

The counterweight design has several advantages. The counterweight has habitable modules that are close together and have multiple access routes between them. It also has the possibility of re-using the entirety of ISS by incorporating less useful parts into the counterweight. It could even use some non-payload mass in the form of the casing of the rockets used to launch new mass to the station.

The counterweight design also requires many more launches than a comparable dumbbell design. A large number of EVAs would be required to assemble just the counterweight.

Completely new hardware would have to be designed and launched to connect the various pieces of the counterweight. There would also probably be a need to launch additional mass to use as a counterweight because so much of the ISS would be used for the habitable portion of the station. If the habitable portion of the ISS was small enough this would not be a factor.

The dumbbell design would have much lower launch costs than a comparable counterweight design because overall it would be much lower mass. The counterweight would need to be almost as massive as the rest of the station for it to be effective. The dumbbell design is also more efficient because all of the mass fulfilling at least two roles by livable habitat and also balancing the artificial gravity. The dumbbell design also allows all the major portions of the station to be shirtsleeve accessible, facilitation inspections or repairs.

The dumbbell design also has its drawbacks. The habitable areas are separated by approximately 100 m and this distance would need to be traversed daily. It is unknown how sensitive the changes in the body are to changing gravity so frequently even if briefly. It is possible it could adversely affect the scientific study of the effects of Mars gravity on the human body. It will almost certainly affect the astronaut's adjustment to the different gravity level as this is usually based on time spent in a particular environment. It is possible that the passage back and forth from one side to another will become quite frequent. The dumbbell design calls for trash and other waste products to be moved from the living quarters side to the science side to be stored outside the airlock. Also, if certain systems break down, such as the hygiene facilities, the back-up system is located on the opposite side of the station. The dumbbell design also requires counterweights to function, although on a much smaller scale. It has stability arms that keep the station from spinning in an uncontrolled manner. These will be new mass that must be launched as well.

The main driving factor in the design of SSP is cost. It is one of the few design constraints that has very few options for adjustment. Things such as fault tolerances, timeline issues, and ISS compatibility have multiple options all of which could work. Launch costs on the other hand are nearly impossible to change. SSP can only utilize American launch vehicles that will be in use by the time ISS is to be changed into SSP. This launch cost remains around $10,000 / kg on any of the launch vehicles available. SSP also has a very strict budget. Hence, a design that twice as massive as another design is much worse. This single factor has much higher weight than any of the others because it is so difficult to get around. The other factors can be compensated for or designed around. The cost is almost constant. If the launch cost were ignored the counterweight might be a competitive design. Otherwise, the expense of launching all the necessary things for a counterweight far outweighs the expense of small stability arms. The few drawbacks of the dumbbell design can be worked around but the cost of the counterweight cannot. The dumbbell design is a better choice.

# III. Townhouses

## 3.1 Living Space Requirements (Alessandra)

The maximum amount of uninterrupted time that a single crew will be on the station is 30 months (2.5 years). During this time there will be six crew members on the station which is the maximum number of crew members that will be on the station at any one time. For the crew to maintain functionality and to keep high morale there must be a certain amount of space allotted to living on the station. Living space includes areas on the station where the crew will sleep, eat, relax, exercise, practice hygiene, and get medical attention. It does not include any space allotted to walkways, storage, science, or work. Living space on SSP consists exclusively of the area contained on Townhouse A. A minimum amount of living space required for optimum performance on a mission of this duration is $8.4m^2$/person.[5] When the floor of the modules is at the height of the top of the floor racks, the SSP exceeds this minimum requirement and has over $10m^2$/person when considering a six person crew.

A desired minimum ceiling height was determined for the station. The model humans considered for sizing of the SSP cabin were the 95$^{th}$ percentile American male at a height of 1.901 meters and the 5$^{th}$ percentile Japanese female at a height of 1.489 meters[6] (level 1 requirement number 21). Since the 95$^{th}$ percentile American male is significantly taller, that height is the one which was considered in creating the desired minimum ceiling height. For most places which are located in normal Earth gravity, there is a minimum ceiling height of 2.134 meters (7 feet). This leaves a buffer zone over a 95$^{th}$ percentile American male of 0.234 meters. While in reduced gravity, there is additional bouncing associated with walking when compared with walking in 1g conditions. This additional bouncing would reduce the perceived buffer zone above the heads of the crew on the station and could result in the crew bumping their heads on the ceiling. To compensate for this, a jumping height of 0.152 meters (0.5 feet) in 1g was assumed. This number was then used to find the ratio of jumping height in variable gravities to jumping height in 1g, as shown in Table 3.1.1. The crew doing the Mars simulation mission will be at a gravity of 3/8g for 21 months, which is the longest time that any one crew will be at any given gravity level. This gravity was used to pick the buffer zone for the minimum ceiling height, which is 0.623 meters. With this buffer zone added onto the typical minimum ceiling height, the desired minimum ceiling height on SSP is 2.757 meters.

---

[5] National Aeronautics and Space Administration. Preliminary Technical Data For Earth Orbiting Space Station: Standards and Criteria. Vol. 2. Huston: 1966.

[6] National Aeronautics and Space Administration. Man-System Integration Standards. Revision B. Huston: July 1995.

Table 3.1.1. Ceiling height buffer zone calculations

| gravity (g's) | jumping height (m) | Ratio to 1g jumping height | Buffer Zone (m) |
|---|---|---|---|
| 1.0000 | 0.152 | 1.00 | 0.234 |
| 0.9375 | 0.163 | 1.07 | 0.249 |
| 0.8750 | 0.174 | 1.14 | 0.267 |
| 0.8125 | 0.188 | 1.23 | 0.288 |
| 0.7500 | 0.203 | 1.33 | 0.312 |
| 0.6875 | 0.222 | 1.45 | 0.340 |
| 0.6250 | 0.244 | 1.60 | 0.374 |
| 0.5625 | 0.271 | 1.78 | 0.415 |
| 0.5000 | 0.305 | 2.00 | 0.467 |
| 0.4375 | 0.348 | 2.29 | 0.534 |
| 0.3750 | 0.406 | 2.67 | 0.623 |
| 0.3125 | 0.488 | 3.20 | 0.748 |
| 0.2500 | 0.610 | 4.00 | 0.935 |
| 0.1875 | 0.813 | 5.33 | 1.246 |
| 0.1250 | 1.219 | 8.00 | 1.869 |
| 0.0625 | 2.438 | 16.00 | 3.739 |

Although a desired minimum ceiling height was determined, the ceilings in the modules are slightly lower than would have been preferred and vary depending on the module. Since pre-existing modules were used to make up the SSP, the ceiling height was restricted by the size of the modules.

## 3.2 Limits of Construction (Meehan)

### *3.2.1 Driving Factors*

As is the case with any design, there are certain factors that have shaped the overall configuration of SSP. Due to the kinematics of rotational acceleration, the overall station geometry had to be carefully designed with very careful consideration being paid to the placement of its various modules. By simple geometry, it was noted that as the station grows in 3d-space, so too will the length of the arms that drive its ability to produce the desired gravity environment. Because of this, it was determined early on in the design process that this notion would be a significant driving factor in the design of the SSP.

### *3.2.2 Why 5% Variation?*

Since the SSP is spinning at a fixed rate and all points in the habitable portion of the station are not equidistant from the center of rotation, it was predicted that there would be a variable gravity gradient encountered when moving from one part of a townhouse to another. Because of this, a limit in this variation had to be determined, and using the

fixed geometry and rotational rate of the station in conjunction with the height of a 95% American male[7] standing along the radius of rotation, a maximum limit was determined by the following derivation:

$$a_{rot} = \omega^2 r \tag{3.2.1}$$

$$a_{head} = \omega^2 r_{head} \tag{3.2.2}$$

$$a_{feet} = \omega^2 r_{feet} \tag{3.2.3}$$

$$\%dif = \frac{|a_{feet} - a_{head}|}{a_{feet}} * 100\% \tag{3.2.4}$$

$$\%dif = \frac{|\omega^2 r_{feet} - \omega^2 r_{head}|}{\omega^2 r_{feet}} * 100\%$$

(3.2.2) & (3.2.3) into (3.2.4)

$$\%dif = \frac{|r_{feet} - r_{head}|}{r_{feet}} * 100\% \tag{3.2.5}$$

$$\%dif = \frac{|45 - 43.1|}{45} * 100\%$$

$$\%dif = 4.5\% \approx 5\%$$

[7] NASA-STD-3000. Man-System Integration Standards. Revision B. NASA, 1995

### *3.2.3 Limits of Construction*

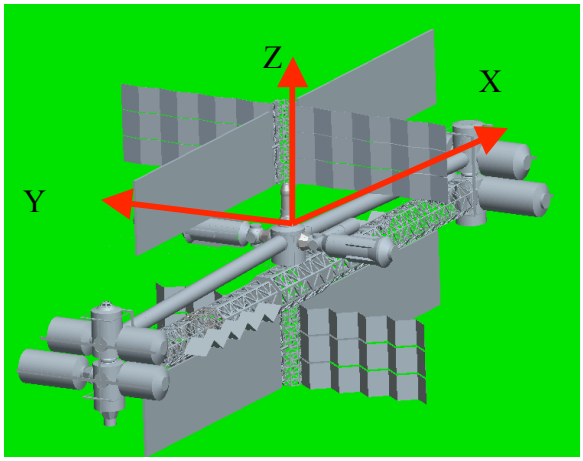

**Figure 3.2.1:** SSP reference frame

For the purposes of this analysis, two items were known: the arm length of the station (determined to be 44.5 m per the length of the available ISS trusses) and its spin rate (max: 4.5 RPM). The station was designed to spin about its z-axis in the frame of reference shown in Figure 3.2.1. The gravity produced by the rotation of the station was then modeled by the equation for rotational acceleration: $a_{rot} = \omega^2 r$.

Given the geometry of the situation, any construction occurring parallel to the stations z-axis was determined to be acting at the same radial arm length as the limiting length of the trusses, so there would be no gravity gradient along this axis. However, construction parallel to the x and y axes significantly altered the length of this radial arm. In the case of the x-axis, this relationship was linear; and in order to meet the limit of a 5% variation from the nominal gravity condition, construction parallel to this axis had to be limited to ±1.4 m, as seen in Figure 3.2.2, essentially eliminating the possibility of a multi-story townhouse. Similarly, construction parallel to the y axis was determined to impact the length of the rotational arm, however in this case the influence was non linear. Again, to satisfy the 5% requirement outlined earlier, the construction in this dimension was limited to 11.3 m in either direction, as can be seen in Figure 3.2.3. The supporting MATLAB code for these calculations can be seen in Appendix A.7.

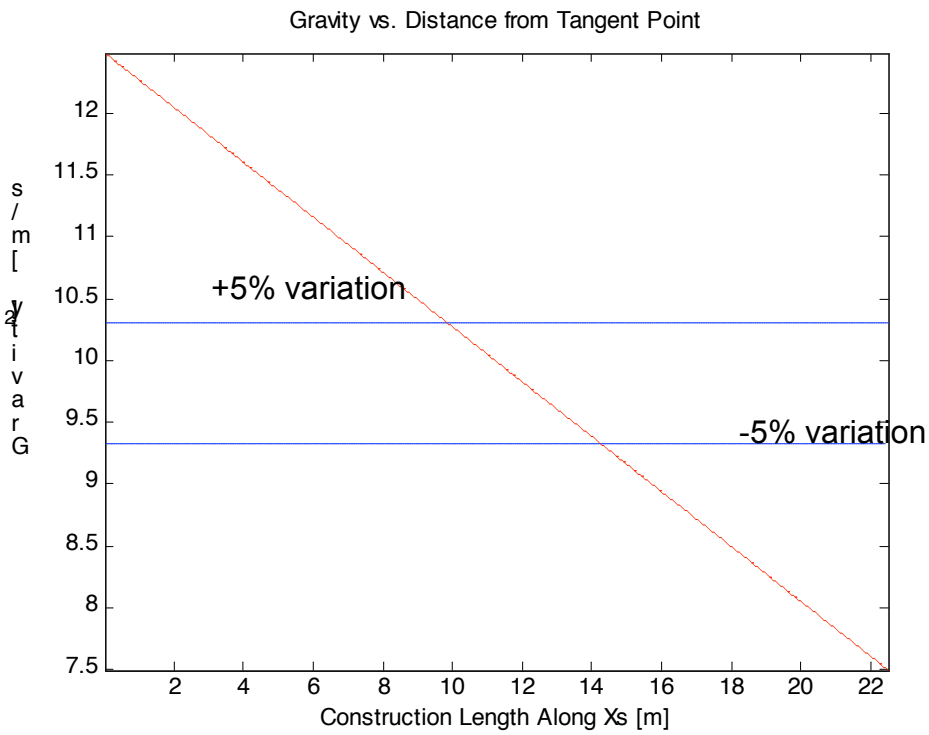


Figure 3.2.2: Gravity variation along SSP's x-axis

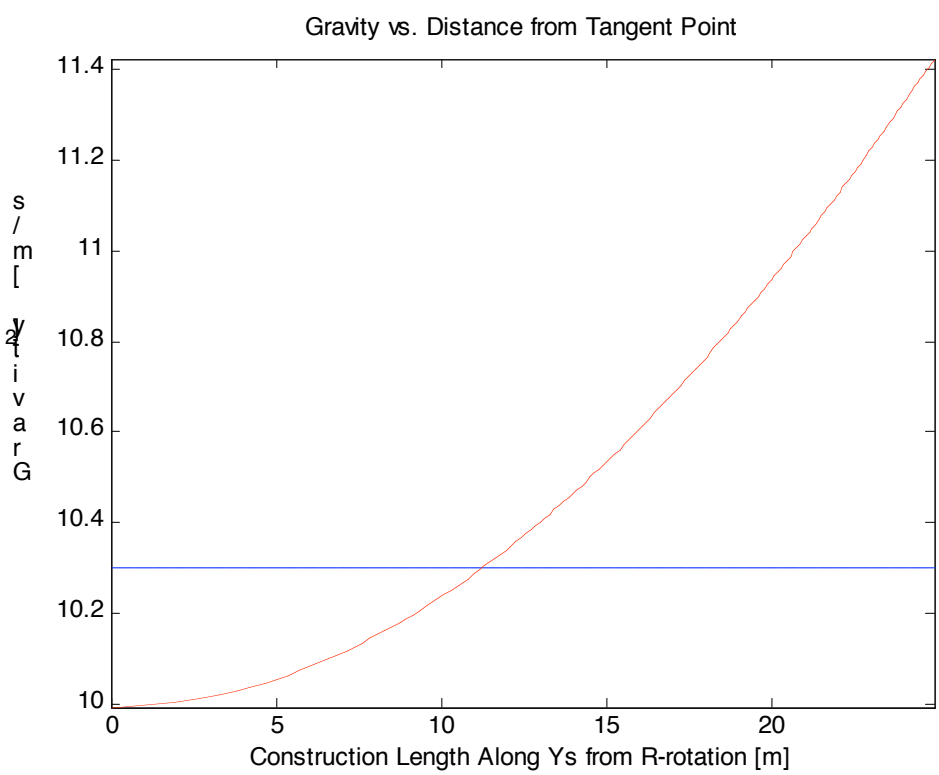


Figure 3.2.3: Gravity variation along SSP's y-axis

## 3.3 Module Functions (Alessandra)

The townhouses are split up into living (Townhouse A) and working (Townhouse B) areas. This decision was based on the fact that it is desirable to have the work and living areas split up for psychological reasons.[8] This way the crew can easily simulate a "normal" work day by going through the inflatable pass through tube to work in the morning from Townhouse A to Townhouse B, and then going home through the inflatable pass through tube at the end of their work day back to Townhouse A.

Townhouse A is made up of three Multi Purpose Logistics Modules (MPLM) – Raphaello (food preparation/galley), Leonardo (sleep/personal space), and Donatello (exercise/medical facility); and the Russian Research Module (RM) (sleep/personal space). Townhouse A also has two Node 3's which both have a Waste Collection System (WCS) and a hygienic facility. Each Node 3 has a WCS and a hygienic facility since the crew will be spending the bulk of their time in Townhouse A and they will also be in Townhouse A when the bathrooms will be in high demand (morning and night). On a space station there should be at least one bathroom for every four crew members.[9] During the Mars simulation there will be six crew members living on the station for an extended period of time, justifying the need for two WCS's and two hygienic facilities on Townhouse A. Cupola is also located on Townhouse A. This module will provide the crew with windows to look out of which will add to the psychological health of the crew.

Townhouse B is made up of JEM-PM, JEM-PS, Columbus, and Destiny. JEM-PM and Destiny are utilized for science and storage. Columbus is delegated to Mars surface simulations. JEM-PS was added for additional storage. Townhouse B also has a Node 3 with a WCS and a hygienic facility. This way the crew will not have to go through the pass through to Townhouse A every time they need to use the bathroom or to wash up after working. A Node 2 is also located on Townhouse B and will serve as additional storage.

## 3.4 Sleeping Modules (Alessandra)

The two sleeping/personal space modules are the Leonardo MPLM and the Russian RM located on Townhouse A. One of these modules is located on each of the Node 3's on the Townhouse. The modules are located on separate Node 3's to cut down on traffic to the WCS and hygienic facilities located on the Node 3's.

For the crew to stay happy and healthy for the duration of their time on the station they must have a place to sleep. The largest number of crew members that will be on the station at one time is the six who will be on the station during the Mars simulation mission. The Russian RM is outfitted to house four crew members and Leonardo MPLM

---

[8] Connors, Mary M., Albert A Harrison, Faren R. Atkins. Living Aloft: Human Requirements for Extended Spaceflight. Washington, DC: National Aeronautics and Space Administration. 1985.

[9] National Aeronautics and Space Administration. Preliminary Technical Data For Earth Orbiting Space Station: Standards and Criteria. Vol. 2. Huston: 1966.

houses two crew members. The floor plan of the modules is shown in Figure 3.4.1 and Figure 3.4.2. All of the racks are removed from the modules except for the racks which make up the floor. These racks are used for storage and to provide the structure of the floor. Additional structure is added to the floor for the spaces where the racks did not provide enough support. The beds are lofted and are secured to the modules by attaching them to the upper rack supports. Step ladders are provided to make sure someone the size of a 5$^{th}$ percentile Japanese female can easily get into and out of bed. These step ladders will be stored under the floor when not in use and can be secured to the floor when in use. The structure of the beds is made of polyethylene to cut down on radiation absorption while sleeping, and sleeping restraints for microgravity are provided.

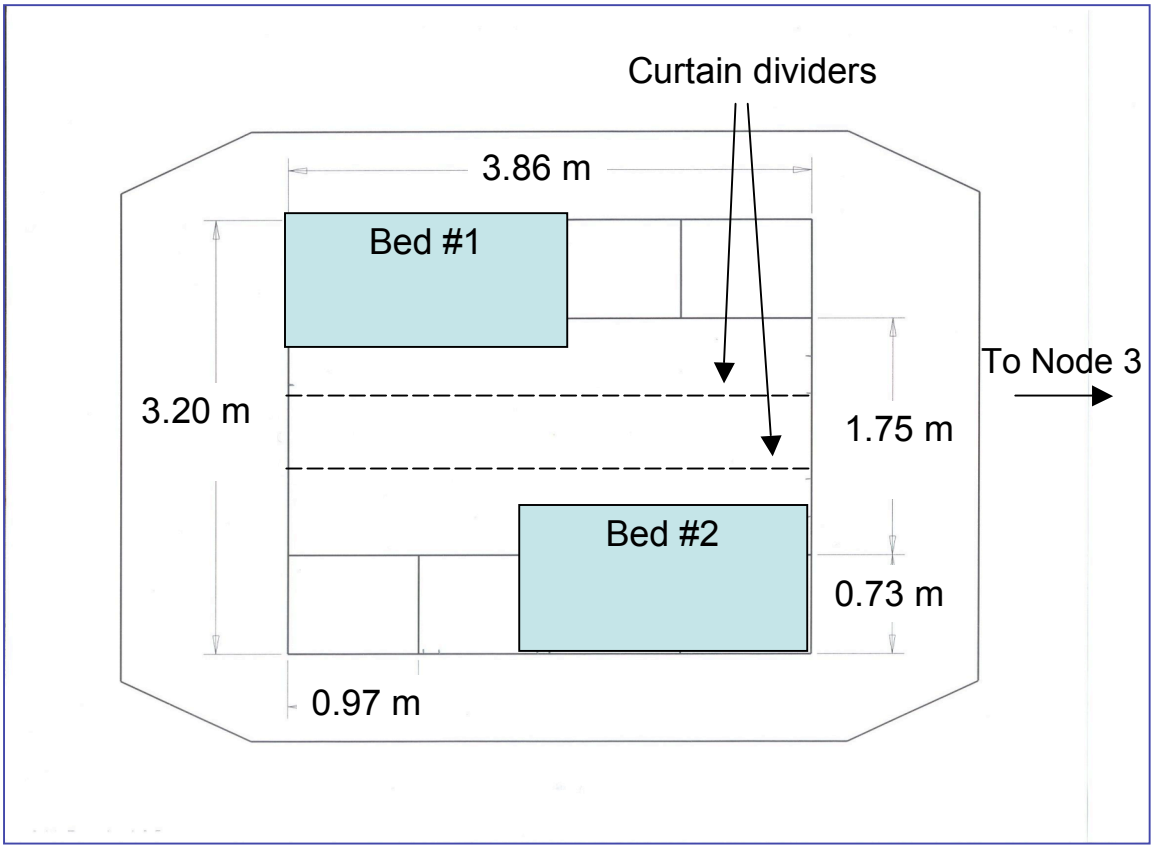


Figure 3.4.1: Leonardo MPLM floor plan

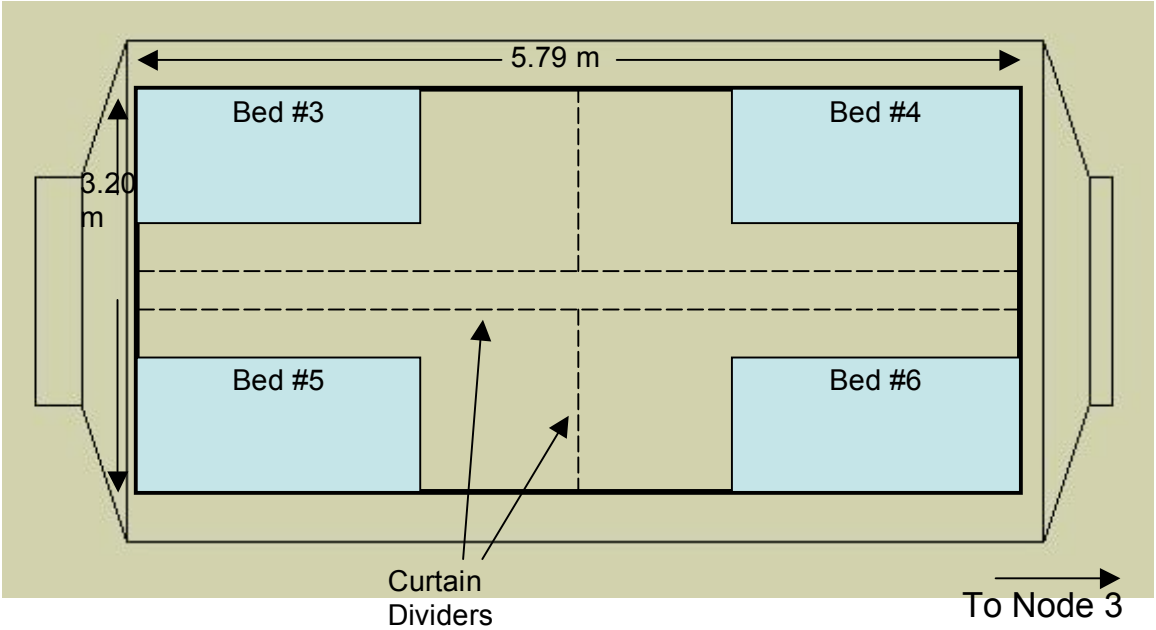


Figure 3.4.2: Russian RM floor plan

Between the bed and the floor there is 1.75 meters of space. This space houses a desk with a chair (which can be stored while in microgravity) and restraints for microgravity. Table 3.4.1 shows the mass and volume of all of the materials that is added into the two sleeping modules. The crew members staying in the Russian RM each have 3.8m$^2$ of personal space while the crew members staying in the Leonardo MPLM each have 5.1m$^2$ of personal space. This amount of personal space exceeds the minimum requirement of 3.3m$^2$/person.[10]

It is desirable for each crew member to have space where they can have privacy to maintain their psychological health. To provide this privacy, curtains are located in the sleeping modules which close in each person's personal area for the times when increased privacy is desired. When the curtains are closed, there will be a walkway 0.55 meters wide through the modules. This will allow for a 95$^{th}$ percentile American male to comfortably fit through.

Table 3.4.1: Mass and volumes of added material into the Russian RM and the Leonardo MPLM

| item | location | number | mass (kg) | volume (m3) |
|---|---|---|---|---|
| bed and sleep restraints | RM | 4 | 35 | 0.4 |
| bed and sleep restraints | MPLM: leo | 2 | 35 | 0.4 |
| desk and restraints | RM | 4 | 75 | 0.6 |
| desk and restraints | MPLM: leo | 2 | 75 | 0.6 |
| chair | RM | 4 | 10 | 0.2 |
| chair | MPLM: leo | 2 | 10 | 0.2 |
| hygienic kit | RM | 4 | 1.1 | 0.01 |
| hygienic kit | MPLM: leo | 2 | 1.1 | 0.01 |
| additional floor | RM | 1 | 100 | |
| additional floor | MPLM: leo | 1 | 100 | |
| personal storage space | RM | 4 | 3 | 1.4 |
| personal storage space | MPLM: leo | 2 | 3 | 1.4 |
| **totals** | | | **448** | **5.2** |

[10] National Aeronautics and Space Administration. Preliminary Technical Data For Earth Orbiting Space Station: Standards and Criteria. Vol. 2. Huston: 1966.

Each crew member will be provided with at least $1.4m^3$ (maximum of 3kg) of personal storage which will be located under the floor of the modules or in their personal areas if there is sufficient space.

## 3.5 Galley Design (Rosendall)

Several Level 1 requirements directly pertained to the design of SSP's galley area, located on the MPLM module Raffaello. The first requirement states that there will be no re-supply during the full duration simulation of a Mars mission. This requirement, as well as that mandating a crew size of six, has implications for the types and amounts of consumables needed, and thus the allotment of necessary space for consumables aboard Raffaello. The requirement that the station's gravitation level must vary, and that systems must accommodate an astronaut size range from a $5^{th}$ percentile Japanese female to a $95^{th}$ percentile American male, determine how several components much be implemented on SSP. Specifically to Raffaello, the meal table is one such component. Lastly, the NASA Standard 3000 document gives system-level information necessary to the design of the galley.

The MPLM used to house the galley area has 16 total racks, 4 of which needed to be removed to allow necessary headspace for the astronauts. The ceiling height is 2.6 m, and the floor space is 6.7 $m^2$, both of which exceed the required amounts.[11] Five of the available racks are "active racks," meaning that they are equipped with the power necessary to operate the microwave, refrigeration unit, and other systems with such needs.

[11] Space Station Assembly: Multi-Purpose Logistics Modules, NASA, 2006, http://www.nasa.gov/mission_pages/station/structure/elements/mplm.html

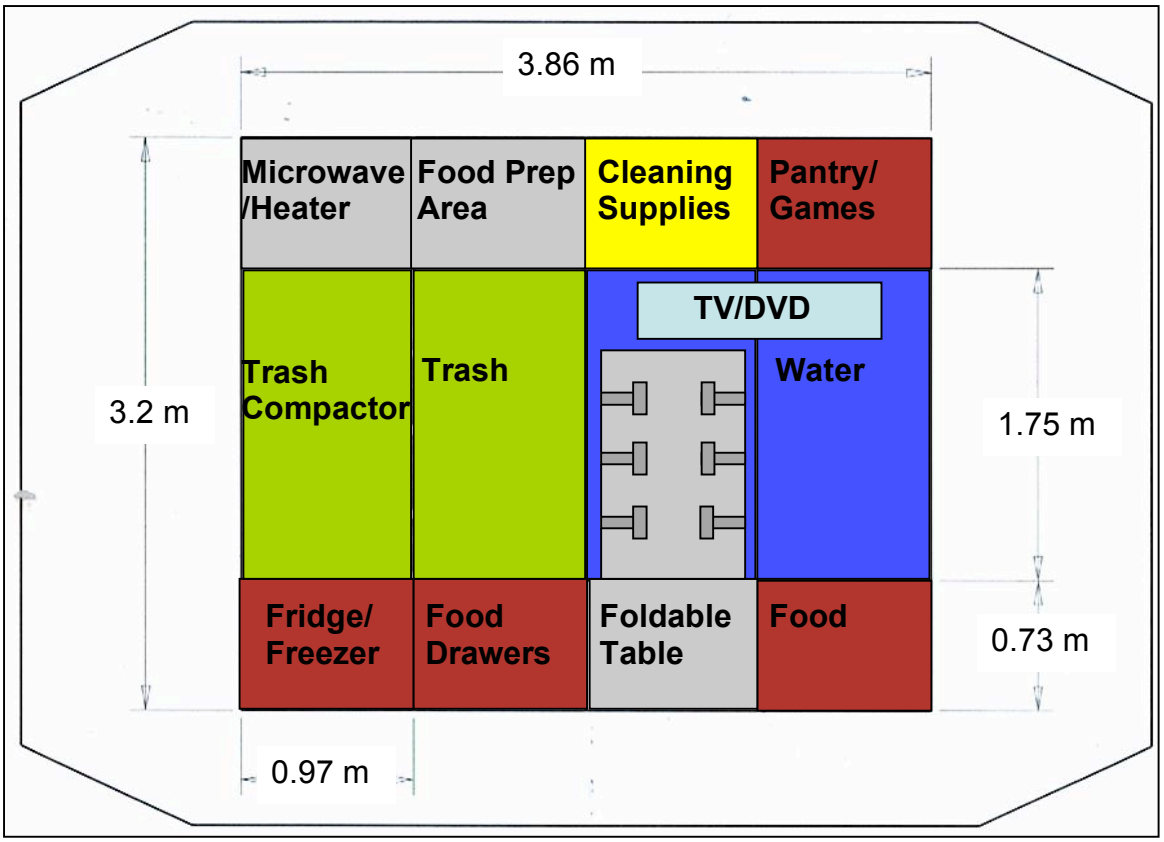


Fig 3.5.1. Raffaello Floor Plan

Figure 3.5.1 shows a top-down view of the Raffaello, with the top rack removed. In the galley, hot or cold water is delivered from a rehydration station (food prep area). The water dispenser in this area is critical for consumption of rehydratable foods. A microwave and an air convection oven exist for the heating of food before being eaten.[3] Likewise, refrigeration and freezing fulfill the need to store other types of food during the mission. The active racks contain the water dispenser, oven, microwave, water heater, trash compactor, and refrigeration unit.

In one rack, there are drawers that have color-coded food items corresponding to the daily food for each astronaut. There is room in these drawers for a 2-month supply of food for the full crew, and every month the drawers will be re-supplied with food stored in the other modules. Astronauts will thus be well-supplied with food in the event that an emergency keeps them from switching between townhouses.

Other sections of the galley include the pantry, eating area, and entertainment area. The pantry is one of a few locations in Raffaello where food is stored, and this is where the natural form foods that astronauts can have as snacks are stored. In the eating area, the meal table accommodates the full crew of six astronauts, and is folded down from a rack during partial gravity. In microgravity the table is unnecessary, and the crew eats using individual meal trays and straps to secure themselves to the walls. Directly facing the eating area is a TV/DVD which can be folded down from the ceiling for the astronauts'

viewing pleasure. There are also games the astronauts can play during leisure time that are stored in shelves in the pantry.

## 3.6 Storage (Rosendall)

There is a significant need for storage on SSP that is accommodated with rack space among the modules of the two townhouses. The items that need to be stored among the townhouse modules are the food, emergency water, clothes, hygienic supplies, and cleaning supplies. This amounts to 44 racks of storage items as currently distributed:

Table 3.6.1. Storage Volume and Rack Allocation

| **Product** | **Total Volume (m3)** | **Rack Allocation** |
|---|---|---|
| Food | 23 | 15 |
| Emergency Water | 1.8 | 2 |
| Clothes | 10.5 | 7 |
| Hygienic Supplies | 9.86 | 7 |
| Cleaning Supplies | 19.7 | 13 |
| Solid Waste | 18 | *Outside JEM-PM* |
| Trash | 1.3 | *Outside JEM-PM* |

As is shown in the bottom rows of Table 3.6.1, the solid waste and trash will be stored in a removable canister outside the airlock on JEM-PM, to be removed upon re-supply. The storage items are stored in the townhouse modules, including Raffaello, Donatello, Leonardo, Destiny, JEM-PM, JEM-ELM-PS, and one of the nodes. (Columbus could not be used for storage because all ten racks were used for Mars EVA purposes.) The storage breakdown is shown in Table 3.6.2, where the table header shows the modules used for storage, with the number of available storage racks for each module in parentheses:

Table 3.6.2. Storage Layout

| Product | Racks | R (6) | D (2) | L (1) | Dest(5) | JEM-PM(14) | JEM-ELM-PS(8) | N3A (8) | N2 (8) |
|---|---|---|---|---|---|---|---|---|---|
| Food | 15 | 3 | - | - | - | 8 | 4 | - | - |
| Water | 2 | 2 | - | - | - | - | - | - | - |
| Clothes | 7 | - | - | 1 | - | 6 | - | - | - |
| Hygiene | 7 | - | - | - | 2 | - | 3 | - | 2 |
| Cleaning | 13 | 1 | 2 | - | 3 | - | 1 | - | 6 |

All of the storage space in the living modules, Destiny, and the Japanese modules are used, while there is excess storage space in the nodes on each townhouse. Some of these excess racks on the nodes are used for water/urine processing, hygiene facilities, life support systems, and emergency oxygen storage.

## 3.7 Interior Layout (Alvarado)

### *3.7.1 Exercise Facilities*

Due to length of time the crew will be spending in zero-gravity, sufficient exercise is crucial for the astronauts to be healthy enough to perform in the Mars gravity portion of the experiment. When in a zero-gravity environment for an extend period of time the astronauts will suffer from atrophying muscles and loss of bone density. In order to combat this phenomenon the following exercise equipment will be used on SSP, a treadmill, ergometer, rowing machine, and an exercise mat. Currently ISS has a treadmill and ergometer that are modified for use in zero-gravity, so they will incur no research and development costs. The rowing machine will have modified, and if replacements, are need they will be launched. Table 3.7.1 contains each piece of exercise equipment and its estimated mass, power and floor space requirement.

Table 3.7.1: Exercise Equipment

| Equipment | Mass (kg) | Power (kW) | Dimensions (m) |
|---|---|---|---|
| Treadmill | 160 | 2.61 | 1.8 x 0.8 |
| Ergometer | 75 | 0 | 1.5 x 0.8 |
| Rowing Machine | 40 | 0 | 1.9 x 0.5 |
| Exercise Mat | 30 | 0 | 1.9 x 0.8 |

During the zero-gravity portion of the mission the treadmill will be required by the crew to slow the degradation of the density of their bones. This is because the treadmill will provide a high impact exercise for the crew. The treadmill will most likely provide even more benefits to exercise in a partial gravity environment because the astronauts will still need to be strapped down and will have subjected to a gravity force not normally present in zero-g. The ergometer and rowing machines are not high impact exercise machines so they are much more forgiving on the joints. The main purpose of that exercise equipment will be to provide a cardiovascular work out as well as working out the muscles in the lower and upper body, respectively. Now there is also an exercise mat in the MPLM that will be used in 1-g or various partial gravity environments acting for a place for calisthenics and stretching to be performed.

### *3.7.2 MPLM Donatello Floor Plan*

Figure 3.7.1 is the floor plane for the MPLM Donatello the exercise and medical module. The exercise machines are in red and are positioned at the far end of the module. All of the items in the figure are to scale so there is plenty of room for all three machines to be used at the same time. The light blue rectangle is the medical bed and the turquoise rectangle where the exercise mat will be located, in front of the two racks that are standing vertically. The first of the two racks contains medical and exercise supplies with the second rack being the HRF I. There will be four storage racks that will remain located in the floor of the MPLM all of the other racks will be removed for space for the

exercise and medical equipment. There will be a partition in place around half of the medical bed to separate it from the exercise area, to dampened the sound and provide privacy from the ill individual.

Figure 3.7.1: Donatello Floor Plan

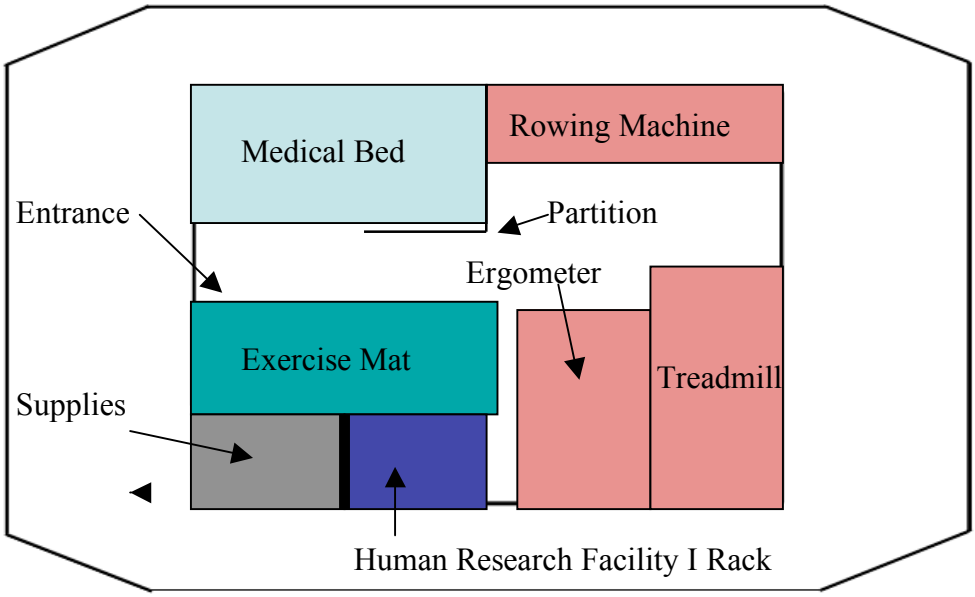


## 3.8 SSP Science (Brookman)

### *3.8.1 Overview*

Two Level 1 project requirements are addressed by the Science missions on SSP:

1) Mars Surface EVA simulation
2) Quantify effects of variable gravity on human physiology

SSP will allow for additional space research, which can be directly applied to future Mars missions. The ISS allowed for a microgravity reference for plant growth, cell biology, life science, and human physiology. SSP will take this further, providing a testing arena for similar experiments in partial gravity levels. There will be a focus on Martian science simulation, mammalian response to partial gravity, and growth of edible biomass under reduced gravity conditions. As the Level 1 requirements dictate, the focus on human physiology will be important.

Each scientific experiment will be housed in the commonly accepted International Standard Payload Rack. These are refrigerator-sized (approximately 1.6 $m^3$ volume) and are loaded and accepted into science modules Columbus, JEM, and Destiny (Figure 3.8.1).

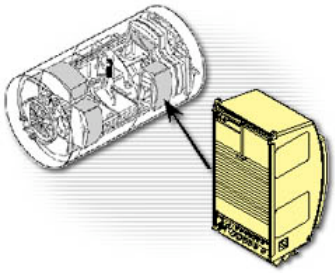

Figure 3.8.1: ISPR
Credit: http://stationpayloads.jsc.nasa.gov/E-basicaccomodations/E1.html

Scientific endeavors make use of as much pre-existing equipment as possible in order to reduce development and launch cost. Legacy equipment on SSP will simply be

relocated within the completed station for placement in strategic locations. Many experimental racks contain modular slots for swapping experiments in and out as they are completed.

### *3.8.2 Science Module: Columbus*

On ISS, there are 10 racks dedicated to scientific endeavors. On SSP, all 10 of these will be used for a Mars EVA simulation, which will permit two astronauts to work together in Mars EVA suits featuring pressure gradients that will create the feel of a Mars environment.

### *3.8.3 Science Module: Donatello*

Donatello is not a dedicated science module, but it does contain one of two Human Research Facilities. The rack designated HRF1 is located next to exercise equipment for study of astronaut vital signs and physiological qualities during exertion. Details for the SSP modified version of HRF1[12] are outlined below.

#### 3.8.3.1 HRF1:

Human adaptation to variable gravity is studied during exercise using an Ambulatory Data Acquisition System. This system monitors heart rate, core body temperature, blood pressure, and respiration rate.

Crew body mass will be measured during microgravity using the Space Linear Acceleration Mass Measurement Device (SLAMMD). Additional mass and force measurements will be taken using a system that records the force between an astronaut's foot and the floor surface.

A Hand Grip Dynamometer will measure crew hand strength and help assess muscle atrophy during levels of decreased gravity.

HRF1 will be the base for a continuous blood-pressure device that can be worn over the course of 24 hours. Additionally, it will be the base for the activity monitor that will track crew sleep quality and collect data on sleep onset times.

### *3.8.4 Science Module: Destiny*

On ISS, Destiny contains space for 24 racks total (6 on each side). There are 13 racks dedicated to scientific endeavors. These are located primarily on the "walls" of Destiny to allow scientific experiments to be completed side by side. This configuration is maintained in SSP, which features the following scientific racks in Destiny:

- Human Research Facility 2 (HRF 2)
- Microgravity Science Glovebox (MSG)
- Plant Biotechnology Facility (PBF)
- Mars Research Equipment Test Facility (MRET)

---

[12] NASA, "International Space Station Human Research Facility IS-1998-03-ISS015JSC." NASA Facts. Mar 1998. NASA. 20 Feb 2006 <http://spaceflight.nasa.gov/spacenews/factsheets/pdfs/hrffact.pdf>.

- Rodent Research Facility (RRF)
- HRF Sample Stowage Rack (SSR)

Remaining rack space in Destiny is allocated to crew systems and facilities associated with life support. Specific details of each facility are outlined below:

### 3.8.4.1 HRF2:

The second HRF[12] rack, modified for SSP, will include equipment for enhanced study of human physiology. An ultrasound machine will capture images of blood flow within vital organs for transmittal to Earth for analysis. This equipment will help create an understanding of the effect of reduced gravity on the circulatory system.

Figure 3.8.2: HRF
Credit: http://hrf.jsc.nasa.gov/

The Gas Analyzer for Metabolic Analysis Physiology (GASMAP) will study the chemical makeup of inhaled and exhaled crew respiration to determine concentrations of gas and metabolic rates.

A drawer will be available containing tools and instruments for collecting and storing blood, urine, and saliva, as well as a centrifuge for separating fluids. Samples can be stored in the freezer in JEM or analyzed using onboard equipment.

A non-invasive bone densitometer will be used to determine bone and calcium loss over the duration of the mission. This will enhance the understanding of bone weakness during Mars gravity and during transit.

A head and body tracking system will be based on this HRF that will track motions of astronauts through daily activities to understand the effects of partial gravity and how the astronauts compensate for vestibular effects of the rotating station. A 3-D eye-tracking monitor will also assist during gravity level changes, as it will record important data about human adjustment to artificial gravity. One of the two available HRF racks is shown in Figure 3.8.2.

### 3.8.4.2 MSG:

This rack provides a sealed area for experiments that might otherwise pollute the area or the atmosphere inside of SSP with dust, debris, or fumes. This will be useful in experiments at any gravity level. The microgravity capabilities will allow for long-term experiments during the transit period, while these same capabilities will allow for experiments during partial gravity levels.

Figure 3.8.3: MSG
Credit: http://www.esa.int/esaHS/ESAJVYG18ZC research 0.html

Possible experiments include studies in soil or atmosphere processing equipment for harvesting propellant or performing chemical reactions related to Martian science. The MSG (Figure 3.8.3) serves as an augmentation of the MRET, allowing for more experimental capability.

### 3.8.4.3 PBF:

The PBF rack (Figure 3.8.4) provides regulated environments to test the capability to create edible biomass under varying conditions. There is a glovebox area to isolate astronauts from plant matter.

A future Mars mission will likely include the growth and harvest of plant matter. Plants become "stressed" when under non-ideal conditions and emit a form of the oxygen molecule, superoxide, to alert the rest of the plant that the conditions are not hospitable[13]. This is a harmful element for plants, and there are known enzymes and microbes that can reduce the amount of superoxide around a plant.

The PBF will study these stressful conditions under Martian gravity and how to reduce superoxide levels. The research will center around understanding how both a plant and a superoxide-reducing organism can survive in a Martian environment. This fits in with work by the NASA Institute for Advanced Concepts, which is considering research that will test plant adaptation to low air pressure, non-ideal soil, and dry or cold air[13]. Additionally, the PBF will be able to control the chemical makeup of air. Simulating a Mars environment in Martian gravity will lead to innovations that will help astronauts grow edible biomass on an extended Mars journey.

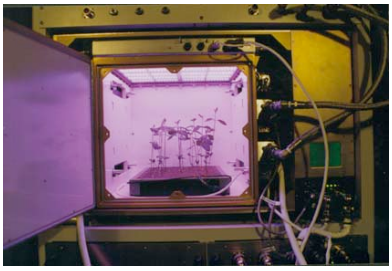

Figure 3.8.4: PBF
Credit: http://wcsar.engr.wisc.edu/cpbf.html

### 3.8.4.4 MRET:

The MRET rack allows for testing possible equipment that would be suitable for a Mars expedition. The equipment includes systems required to process Martian soil, geology, and atmosphere in order to produce propellant and refine oxygen. There are areas for testing solar array wiping equipment, as well as areas to study the dust settling effects of solar arrays and sensors to understand the long-term endurance and functionality of these parts.

Parts will be contained and tested on small scales, within their own testing chambers. The SSR will accommodate additional modular experiments for swapping tests.

### 3.8.4.5 RRF:

For additional physiology study, several animals were considered, including laboratory grade rats, mice, monkeys, and fruit flies. Fruit flies are generally only useful in studying genetic trends, so they were discarded from possible options. Monkeys are too large and require too much caretaking and attention for SSP crew. Mice are comparable to rats, but mice are smaller and cannot be handled through a glovebox examining area as well as

[13] NASA, "Prozac For Plants." Science@NASA. 5 Aug 2006. NASA. 5 May 2006 <http://science.nasa.gov/headlines/y2005/05aug_nostress.htm>.

rats, which are larger. The ISS plans originally called for lab rat research, but plans for this were recently stopped.[14]

Typical laboratory rats have the advantage of being great models for biology and human physiology. The National Institutes of Health recognize the value of rat models as being "a superb platform on which to build the genetic and genomic tools and resources to delineate the connections between genes and biology. Importantly, in many instances, the rat is the most appropriate experimental model of human disease[15]". Laboratory rats on SSP will also be models of cardiopulmonary function, behavioral and neurological issues, immune system function, drug toxicology, and skeletal development.

The RRF consists of 3 racks dedicated to the storage and study of research laboratory rats. There are initially 72 rats available for experiment and control, which necessitates large amounts of space for containment. Astronauts will study breeding habits and physiological effects of partial gravity. With new births, scientists will be able to study the psychological qualities of rats that have never experienced particular levels of gravity (and understand how they adapt to any changes).

There are systems available for anesthesia, restraint, respiration and heart rate monitoring, autopsy, and bone density measurement. A glove box is available for scientist interaction.

The rats will be used effectively and humanely. After death, there are safe containers available to seal corpses without exposing them to the SSP atmosphere. The freezer in JEM-PM's experimental racks will serve as cryogenic storage for any important samples that need to be kept either for later study on SSP or for return to Earth.

#### 3.8.4.6 SSR:

Because most experiments are modular and can be stored and conducted in slots within ISPRs, the SSR allows for storing unused or used experiments until they are needed in the various racks within SSP. SSR serves as auxiliary modular storage.

### *3.8.5 Science Module: JEM-PM "Kibo"*

On ISS, JEM-PM contains 23 rack spaces. Scientific work occupies 10 of these. SSP will re-use selected portions of the Japanese Multi-user Experiment Facility (MEF), which will occupy 3 rack slots, while a rack will also be used for experiment container storage. Remaining rack spaces are used for crew systems and life support.

#### 3.8.5.1 MEF:

Selected components from the ISS version of the MEF are used on SSP. Three racks of the MEF will include life science research, specifically on cells and microorganism

---

[14] Berger, Brian. "NASA Halts Work on Space Station Centrifuge Research Hardware." Space News Business Report. 15 Aug 2005. Space News. 15 Apr 2006 <http://www.space.com/spacenews/archive05/stopwork_081505.html>.

[15] National Institutes of Health, "NIH Meeting on Rat Model Priorities." National Heart, Lung, and Blood Institute. 3 May 1999. Department of Health and Human Services. 21 Apr 2006 <http://www.nhlbi.nih.gov/resources/docs/ratmtg.htm>.

cultivation. Additionally, there will be an aquatic chamber to continue the work done by astronauts on ISS in vertebrate growth and breeding studies. To assist in experiments, there is a centrifuge for a 1g control experiment, a microscope with image processor for relaying images to Earth, a clean bench, and a -80° C freezer for tissue storage.

### *3.8.6 Testing Considerations/ Recommendations*

Research on human physiology could include measurements of calcium levels in the bloodstream and in urine while in partial gravity levels, as this is an indication of bone loss and could lead to both skeletal weakness and renal stones[16]. Countermeasures against this effect, such as dietary supplements, can also be studied on SSP. If the bone loss itself cannot be mitigated by supplements, then the renal stones themselves could be studied to determine safe ways to limit their formation and facilitate their disintegration.

As crew health and functionality is the focus of SSP, the true measurements of human ability to withstand reduced gravity will come from the final Mars mission simulation. Transferring ISS studies in microgravity to partial gravity is the focus of SSP science, with the additional research on Mars surface operations. The experiments will provide useful and thorough quantities of data.

[16] "Renal Stone Risk During Space Flight: Assessment and Countermeasure Validation." July 2001. NASA. 5 May 2006 <http://www.nasa.gov/centers/marshall/news/background/facts/renal.html>.

# IV. Remaining Station Configuration

## 4.1 Inflatable Transfer Tubes (Korzun)

SSP configuration requires a pressurized connection between each townhouse and Node 1 on the central axis. This connection must provide a shirtsleeve environment for crew transfer between the living space and science modules. On SSP, operating cabin pressures between 8.3 and 14.7 psi and the partial gravity testing range of 0g to 1g drive the internal and external design of the crew transfer structure.

Two sections of inflatable tubes span each 44.8 m distance between a townhouse and the central node. The physical dimensions of the tube are sized to the exit diameter of the CBM on the nodes each inflatable connects to, a recommended ceiling height based on average heights of a 5$^{th}$ percentile Japanese female and a 95$^{th}$ percentile American male, and the space required to run piping and ventilation systems between Townhouse A and Townhouse B. Each tube has a 2.15 m inner diameter, capable of accommodating a motorized crew elevator for transporting crew and cargo from the central axis, and an overall length of 45 m, making each inflatable section 0.2 m longer than the required span to prevent the tube from being subject to unanticipated axial loads.

### *4.1.1 Selection of Inflatables over Solids*

The two most prominent choices for providing a shirtsleeve environment and spanning almost 90 m of transfer distance are a traditional solid pressure vessel and an inflatable pressurized tube. Table 4.1.1 summarizes the comparison between an aluminum pressure shell and a non-rigid inflatable section for the test case of a cylinder pressurized to 1 atm.

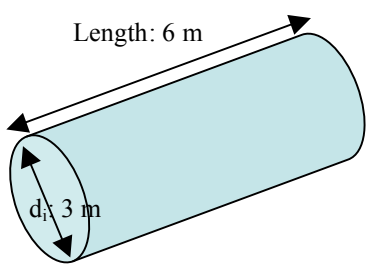


Figure 4.1.1. Test Case Module

| Table 4.1.1. Inflatables vs. Solids for Test Case | | |
|---|---|---|
| Test Case: Cylindrical Module pressurized to 101 kPa (SF = 2) | | |
| **Property** | Solid (Al-7075) | Inflatable (Kevlar) |
| **Yield Strength** | 503 MPa | 3620 MPa |
| **Wall Thickness** | 6.05 mm | 0.840 mm |
| **Module Mass** | 120 kg | 8.55 kg |

The selection of an inflatable structure over a traditional solid pressure shell was based on the inflatable structure mass being more than 14 times lighter than the mass for an appropriate aluminum pressure shell. Also, the advantage of compressing and deploying the entire inflatable structure allows for the use of only one launch to put all components in orbit and simplify assembly.

### *4.1.2 Structural Composition*

The composite structure of the inflatables is modeled after the plying up of current spacesuits. The structure itself consists of a pressure bladder, a restraining layer, and

layers to prevent damage caused by impacts to the exterior of the tube. The pressure bladder is urethane-coated Nylon, and the layer thickness is sized to withstand a maximum pressure differential of 29.4 psi (14.7 psi with a safety factor of 2). A restraining layer made of Dacron, a polyester weave, maintains the rigid volume of the tube as governed by the hoop stress imposed by pressurization. Two layers of Vectran protect against tube failure due to impacts to the structure. These layers are separated by seven layers of unaluminized mylar, which function to prevent the Vectran layers from coming in contact with one another. The thickness of each layer is shown in Table 4.1.2 below, and the layering scheme is shown in Figure 4.1.2.

| 4.1.2. Layering Specifics | |
|---|---|
| **Layer** | **Thickness (m)** |
| Vectran (each) | 0.002 |
| Mylar (total) | 0.003 |
| Dacron | 0.004 |
| Urethane-coated Nylon | 0.003 |
| **Total wall thickness** | **0.012** |

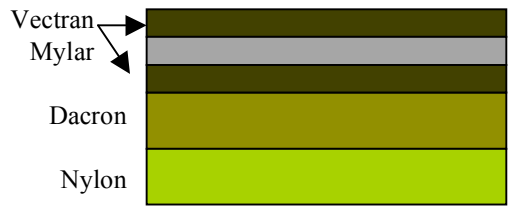

Figure 4.1.1 - Layering Scheme

A summary of the final specifications for the inflatable crew transfer tubes is given in Table XX.2.2 below.

| Table 4.2.2. Tube Final Characteristics | |
|---|---|
| **Total Interior Volume** | 163.4 $m^3$ |
| **Total Interior Surface Area** | 304.0 $m^2$ |
| **Total Softgoods Mass** | 1240 kg |

## 4.2 Transfer Tube Internal Structures (Meehan)

### *4.2.1 Walls, Panels, & Piping*

In addition to providing a shirt-sleeve transfer environment for the crew and hardware, the inflatables also provide a mechanism for running various piping throughout the station. In order to allow the pipes to traverse in the safest way possible, the 2.15 m inner dia. transfer tube has been partitioned into two regions: a crew pass-through with a depth of 1.65 m and a sub wall with a depth of 0.5 m, as seen in Figure 4.3.1. This partition is created by using a series of 2 m x 1.81 m Gilfab 4004[17] panels that attach to hard contacts at regular intervals within the tube. Because of the high shear strength of the panels, in addition to the lightweight nature of the ventilation, water, and nitrogen transport pipes, the effects of attaching the pipes directly to the

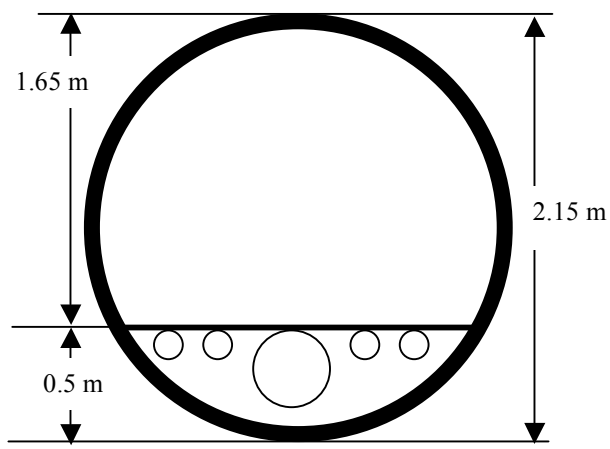

Figure 4.2.1: Top view cutaway of transfer tube piping and sub wall board.

[17] "Gillfab 4004 Panel." M.C. Gill Corporation. 1 March 1997. 1 April 2006 <http://www.mcgillcorp.com/products/datasheets/Gillfab_4004.pdf>.

backside of the wall is negligible. Thus for ease of construction, all piping in the sub wall is connected directly to the panel. The total mass per unit length of the system is 43.8 kg per 3m span, of which 25.2 kg[18] comes from the piping system.

### *4.2.2 Primary Transfer Mechanism*

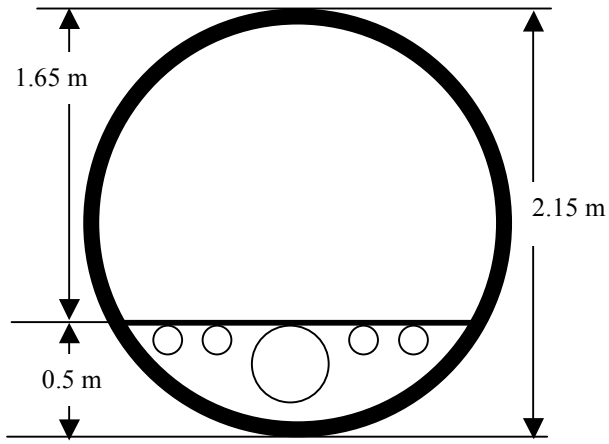


Figure 4.2.2: Top view cutaway of transfer tube piping and sub wall board.

Given the length of the transfer tubes, it was determined that a crew elevator system would be the ideal way for transferring the crew from the center to extremities of the station. The crew transfer region is relatively small, it is imperative that a low-profile lifting system be utilized. For this reason, in addition to being more economic, it was determined that a COTS chair lift would be ideal for this application.

In the case of SSP, a pair of ThyssenKrupp Citia Silver BOS chair lifts is used to achieve the capability of lifting 340 kg by way of a rack and pinion drive system. Because of ThyssenKrupp's ability to cut custom lengths of track for their lift, a series of 2 m sections of track with a mass of 26 kg per piece, offset 180° from each other, will be installed using a modular instillation system similar to that employed when constructing the sub wall. The motors (roughly 70 kg each) are attached to this track.[19]

To outfit these devices for use as a vertical lifting system, the chairs were removed from the lifting motors, which were then connected using a 1.81 m x 1.13 m rectangular lifting platform. This platform is constructed from the same Gilfab 4004 composite paneling described earlier and has a total mass of 7 kg. A top view of this system, with a total mass of 1625 kg per tube can be seen in Figure 3.

### *4.2.3 Secondary Transfer Mechanism*

In the event of a failure of the primary crew transfer mechanism, a rope ladder will be installed and run through the gap (0.52 m in depth) between the inner wall of the inflatable tube and the failed lifting platform. This will allow for access of the failed platform should repair be desired.

Because traversing the tube by way of the ladder will be rather risky, a harness system with ascending and descending mechanisms will be installed in parallel to the ladder.

---

[18] See info on pipes from Avi & Victor. Not sure where the sources are for this one.

[19] "Citia Silver BOS Stair Lift." ThyssenKrupp Access. 5 April 2006 <http://www.tkaccess.com/pdfs/udd.CitiaSilver.pdf >.

This will serve as a belay line to the individual climbing the ladder; should they lose their footing, the ascender would prevent them from falling down the shaft of the inflatable tube.

### *4.2.4 Structural Support Analysis (Korzun)*

The main truss structure on SSP is designed to handle all loading on orbit, with the maximum loading condition being during spin up of the station. The inflatable transfer tubes are designed to support their own weight in 1g, the maximum defined gravity condition, as well as maintain a rigid volume under the prescribed cabin pressures. Analysis of the tube's ability to handle pressure loads is accounted for in the design of the layering of the inflatable's composite wall. The location of the transfer tubes on SSP and radial acceleration due to the rotation make buckling the primary concern as to whether or not the inflatables can support their own weight.

A buckling analysis was done by examining the 3 m section closest to the central axis at the 1g gravity condition. The critical buckling stress for the inflatable transfer tube under 1g conditions is $6.40 \times 10^8$ Pa. Note that this analysis does not account for the stiffness of the aluminum paneling located on the interior of the structure, which is capable of handling any minimal buckling loads that may occur.

## 4.3 Central Axis (Eckert)

### *4.3.1 Purpose*

While a rotating station provided a means to create artificial gravity it also created some complications in design. The main concern arose from the docking options available while the station was rotating. In order to ensure the safest docking scenario possible, the docking ports would have to be non-rotating and have a relatively clear approach. In addition, the platform to which orbit maintenance and attitude control thrusters would be attached to would also need to be stationary to simplify maneuvers. The thrusters also required a platform out away from the rest of the station as much as possible in order to minimize the amount of thrust required. It was also determined that a non-rotating platform would be needed to locate communication equipment in order to optimize the system. The central axis was created such that it is perpendicular to the plane of the main station truss. It was also located so that it passed through Node 1, the central hub of the station, and essentially acting as the axle of SSP.

### *4.3.2 Selection of Components*

In order to determine which components of the ISS would be placed on the Central Axis the function of each module was researched in depth. For the docking requirement several options were considered. US Airlock, Node 2/3, and Pirs were all evaluated on their ability to meet the requirements. US Airlock has only one side EVA hatch and no aft docking port. Based on current information regarding the CEV it was determined that it would be necessary to allow for 2 CEVs to be docked with SSP at the same time. This was based on the possibility that the CEV may only have an on orbit lifetime of a year, and would have to be changed out periodically. This dictates that whichever module is

used for docking must have at least 3, preferably 4 ports. Modifying US Airlock would also eliminate the ability to support US EVA operations, which combined with its lack of ports quickly ruled it out as a possibility.

For Node 2/3 and Pirs it was determined that not matter which module was selected for docking, it would have to be manufactured on the ground. All of the existing Node 2/3s that make up the ISS are to be used elsewhere on SSP. In order to use Node 2/3 for docking, a replacement would have to me manufactured. Pirs has a rated on orbit lifetime of 5 years (among the shortest of all ISS components) which puts it well passed it's lifetime when SSP construction begins. In addition, the side EVA hatches on Pirs need to be retrofitted with an adapter to allow the CEV to dock. If this could be done while Pirs was on the ground it would save time and resources that would otherwise have to be dedicated to an EVA.

Since both modules would have to be manufactured on the ground, Pirs was chosen to support CEV docking on SSP. This is mainly due to the cost of manufacture, which is related to the mass of the module. Pirs, with a mass of 3630 kg is substantially lighter than Node 2/3, which has a mass of 15,500 kg. This in turn relates to a savings in both manufacture and launch cost by choosing a substantially lighter module.

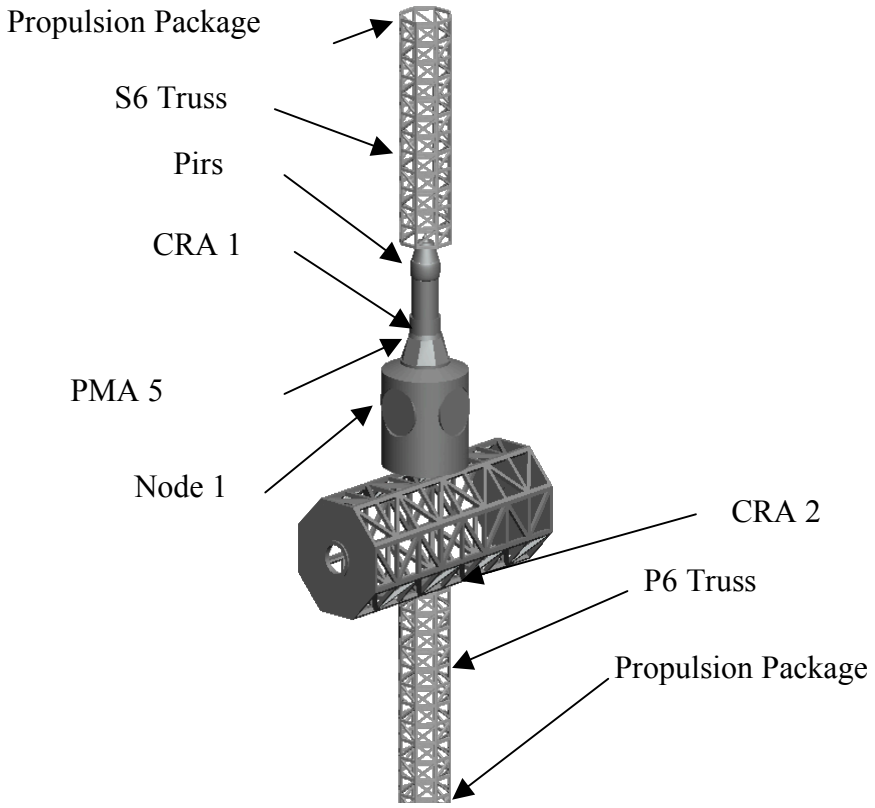


Figure 4.3.1 Central Axis Layout

| **Module** | Purpose |
|---|---|
| ***Center*** | |
| Node 1 | Serve as central hub of SSP for crew, wiring, and plumbing |
| ***Top*** | |
| PMA 5 | Connect CRA 1 and Node 1 |
| CRA 1 | Disconnect top of central axis from rotation of SSP, connect PIRS and PMA 5 |
| Pirs | Provide 2 docking ports for the CEV |
| CEV Adapter 1 | Adapt PIRS airlock hatch to accept CEV docking |
| CEV Adapter 2 | Adapt PIRS airlock hatch to accept CEV docking |
| PIRS Adapter | Connect S6 Truss and PIRS |
| S6 truss | Locate Propulsions package 1 out from center of SSP |
| Propulsions package 1 | Perform orbit maintenance and attitude control, attach thrusters and tanks to S6 truss |
| ***Bottom*** | |
| CRA 2 | Disconnect bottom of central axis from rotation of SSP, connect P6 truss and S0 truss |
| P6 truss | Locate Propulsions package 2 out from center of SSP |
| Propulsions package 2 | Perform orbit maintenance and attitude control, attach thrusters and tanks to P6 truss |

Table 4.3.1 Components of Central Axis

### *4.3.3 Counter Rotating Assembly*

In order to prevent the Central Axis of SSP from rotating the Counter Rotating Assembly (CRA) was created. With the CRA operating, the Central Axis remains stationary while the Townhouses and Stability Arms rotate around it. It consists of a large commercial turntable bearing with external gears. A stepper motor, motor controller, and gear reduction system are used to drive the bearing accurately in a smooth manner. CRA 1 is a crew pass through joining Node 1 and PMA 5, so it also contains a rotating air union joint to provide a seal between the interior of SSP and space. CRA 2 does not have this seal since it connects the S0 truss and the P6 truss, both of which are uninhabitable.

#### 4.3.3.1 Bearing

Although the selected design is much more robust than necessary, the fact that it is an existing commercial design will reduce the overall cost of new design hardware. This design will have to be space rated however.

Avon Bearings
(**www.avonbearings.com**)
Bearing Model # 25108A1

**Table 4.3.2: Dimensions (m)**

| OD | ID | OH | # Teeth |
|---|---|---|---|
| 3.06 | 2.544 | 0.165 | 0.168 |

**Table 4.3.3: Capacity (N-m)**

| Moment | Thrust | Radial | Tooth |
|---|---|---|---|
| 1.18E+07 | 2.13E+07 | 2.46E+06 | 3.07E+05 |

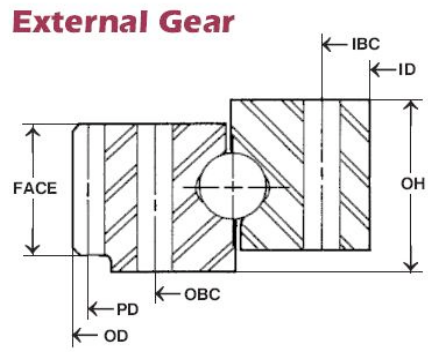


*Image:* www.avonbearings.com

#### 4.3.3.2 Stepper Motor, Controller, and Gear Reduction

A vast assortment of Stepper Motors and Controllers are commercially available, and some are already space rated. Depending on which motor is chosen, a simple gearbox to reduce the gearing would be used, which is also commercially available.

#### 4.3.3.3 Air Union

Again a commercial design was chosen to reduce the cost of new design hardware. FMC Technologies (www.FMCTechnologies.com) offers their Chiksan® line of swivel bearings and have the capability to produce them in the large diameters necessary for SSP. They offer operating temperature ranges of -196°C to +300°C and operating pressure ranges of full vacuum to 70 bar. While the mass estimates are for a steel union they also are able to produce the joint with aluminum instead of steel, which could save weight. This design will have to be space rated as well.

Table 4.3.4 Components of CRA

| Component | Mass (kg) |
|---|---|
| Bearing | 400 |
| Air Union | 350 |
| Motor/Gearing/Controller | 250 |

### *4.3.4 Pirs Adapter*

Pirs and the S6 truss are not designed to connect to each other. In order to overcome this a Pirs adapter very similar to a PMA is necessary.

### *4.3.5 Propulsions Package*

To support the thrusters and tanks for the propulsion located on the Central Axis a propulsions package must be created. In order to contain all necessary propulsion equipment a simple truss that attaches to either the S6 or P6 truss was created. Since the thruster forces are so low a very simple hollow cylinder with end plates was chosen. The propellant tanks are placed in the interior of the cylinder. One end plate serves as the mounting point between the S6 or P6 truss and the propulsions package. The other end plate serves as a flat platform to which the thrusters are mounted. The end plates are removable and have passages to allow tubing and wiring to run though the center.

The material chosen for the propulsions package is 2219 T-81 Aluminum. Analysis was conducted for both the moment due to a max thrust of 12 N acting on the top of a 4.2 m tall hollow cylinder as well an a 12g launch loading. The required thickness of the cylinder was then determined using a yield stress of 324 MPa and a safety factor of 1.4. A minimum inside diameter of the cylinder was chosen to be 1.6 m to allow adequate clearance for both the tanks and any plumbing or wiring that may be necessary. The analysis showed a cylinder thickness of 2 mm would be adequate for this application. Based on this, the mass estimate for the truss is 115 kg.

## 4.4 Stability Arm (Eckert)

### *4.4.1 Purpose*

Dynamic analysis of the simple rotating dumbbell shape revealed the instable nature of the original design. Techniques borrowed from helicopter rotor systems were implemented in order to stabilize the rotation of the station. A stability arm was created that would be in the same plane of the townhouses, but perpendicular to the main station truss. The stability arm is located so that it passes through Node 1, the central hub of SSP. Placing a sizeable mass out away from the center of rotation allowed the stability of the station to be dialed in. In addition, this provides a central location from which to conduct EVA's during construction as well as support automated supply vehicles such as Progress.

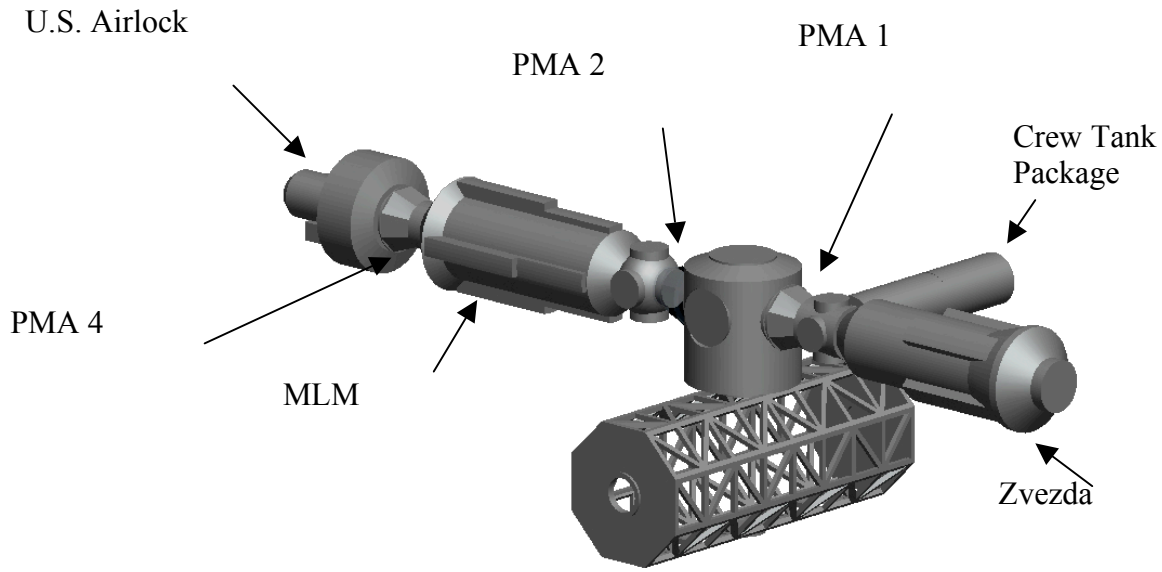


Figure 4.4.1 Stability Arm Layout

### *4.4.2 Components*

In order to determine which components of the ISS would be placed on the Stability Arm the function of each module was researched in depth. Both the Russian MLM and Zvezda are located on the Stability Arm in order to support automated supply mission as well as provide additional experimental space. The US Airlock is located on the Stability Arm in order to support US based EVAs. By it being placed near the center of the station it prevents a situation where an astronaut must travel outside the station from one townhouse to the other to conduct an EVA. The Crew Tank Package is located attached to Zvezda for easy access to the plumbing systems within Node 1.

With the changes detailed in Appendix 10, the Crew Tank Package is split between its location on Zvezda, shown above, and the corresponding location on the MLM, thus allowing shifts of mass for ballasting purposes.

Table 4.4.1 Components of Stability Arm

| Module | Purpose |
|---|---|
| ***Left*** | |
| PMA 2 | Connect Russian MLM and Node 1 |
| Russian MLM | Secondary Attitude Control system, Provide experiment and cargo space |
| PMA 4 | Connect US Airlock and Russian MLM |
| US Airlock | Support EVA operations, storage of EVA suits and tools |
| ***Right*** | |
| PMA 1 | Connect Zvezda and Node 1 |
| Zvezda | Flight Control System, Data processing, Provide docking for automated supply vehicles |
| Crew Tank Package | Storage of liquid hydrazine and water |

## 4.5: Truss analysis (Corbitt)

The ISS truss is going to be reused as the main load carrying structure of SSP. Due to the nature of the new loading conditions it is essential that an analysis be done to verify the integrity of the truss. To do this, some knowledge of the design of the truss must be known. However, specific knowledge about the design is not public domain and so some coarse assumptions are needed to perform the analysis.

The known dimensions of the truss segments can be seen in Table 4.5.1 below.

Table 4.5.1: Dimensions of ISS Truss

| Truss segment | Length (m) | Width (m) |
|---|---|---|
| P5 | 13.7 | 3.9 |
| P3/4 | 10.7 | 3.9 |
| P1 | 13.7 | 3.9 |
| S0 | 13.4 | 4.6 |
| S1 | 13.7 | 3.9 |
| S3/4 | 10.7 | 3.9 |
| S5 | 13.7 | 3.9 |

Each component is attached using a SSAS or Segment to Segment Attach System. The SSAS has a shape of an irregular hexagon with outside dimensions of approximately 4.9 by 2.6 meters (see figure 4.5.1).

Figure 4.5.1: Basic Shape and Dimensions of SSAS

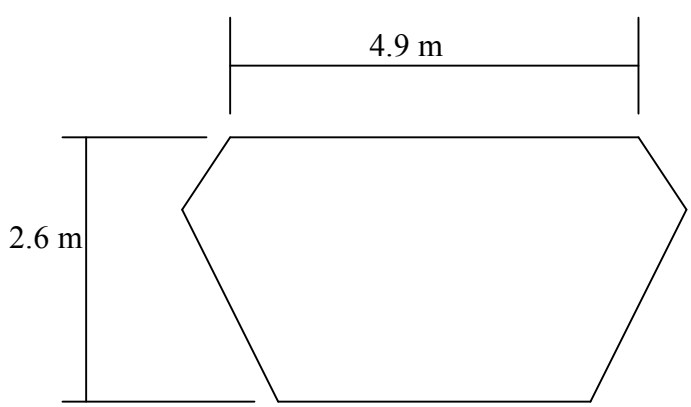

The information above is the best that could be found regarding the design aspects of the truss. Therefore any other information needed for the analysis is assumed.

SSP will spin to produce an artificial gravity environment as high as 1 g. The spin up conditions as well as the constant 1 g spin will cause the truss elements to be in tension or compression due to bending. Theses loading conditions are caused by the tangential and radial forces acting on the components of the station townhouses as well as the individual components of the truss.

To begin the analysis a coordinate system relative to the truss is created. The origin of the system is at the geometric center of the S0 segment. The x direction is along the truss. The z direction is parallel to the central axis and the y direction is parallel to the stabilizing arms. The center of S0 is assumed to be fixed allowing the truss model to be represented as a cantilevered beam. For the analysis to be of use the truss is placed in a worst case scenario. That is, the tangential forces applied during spin up as well as the radial forces applied because of a 1 g spin are a combined loading condition on the truss.

The more massive side of the station is analyzed to account for the worst case scenario. If all components are loaded to their full capacity Townhouse A is more massive than Townhouse B. Each of these components is assumed to have their entire mass located at their geometric center. Knowing the overall dimensions of the truss components and the townhouse components, the coordinates of the discrete masses are determined. Each section of the truss is also discretized and assigned a coordinate. This allows for ease of calculation. Table 4.5.2 shows their masses and coordinates.

Table 4.5.2: Components of Townhouse A and Truss and Their Coordinates

| Structure | Mass (kg) | X (m) | Y(m) | Z (m) |
|---|---|---|---|---|
| | | | | |
| Copula | 1880 | 47.04 | 0 | 7.456 |
| RRM | 15715 | 47.04 | -4.25 | -3.353 |
| MPLM | 13154 | 47.04 | 3.2 | -3.353 |
| MPLM | 13154 | 47.04 | -3.2 | 3.353 |
| MPLM | 13154 | 47.04 | 3.2 | 3.353 |
| Node 3 | 15500 | 47.04 | 0 | 3.353 |
| Node 3 | 15500 | 47.04 | 0 | -3.353 |
| BB/Spin up | 28375 | 49.28 | 0 | 0 |
| S5 | 12598 | 37.95 | 0 | 0 |
| S3/4 | 17900 | 25.75 | 0 | 0 |
| S1 | 15598 | 13.55 | 0 | 0 |
| S0 | 14970 | 0 | 0 | 0 |

The tangential loading is caused by the spin up thrusters acting at the outer length of the truss and the radial loading is caused by the 1 g spin. Theses forces act on each mass at

its specific location and cause bending of the truss. The moments produced by these forces are found using basic vector analysis and:

$$M = r \times F.$$

After the loading conditions are found it becomes necessary to determine how the truss will handle the load. As stated earlier not much is known about the design of the truss. So some assumptions must be made. The truss is assumed to fail at the SSAS connections. So analysis is done based on the geometry of the SSAS and its connection to the truss segments.

The SSAS is an irregular hexagon. For ease of analysis, the SSAS is modeled as a regular hexagon that is inscribed in a 3.75 meter diameter circle. With the use of AutoCAD and the vague dimensions known about the SSAS a crude model of the SSAS was created and the area between the model created and the model assumed are relatively close. With the created model, an I-beam of size 0.15 meters in height and width and a web thickness of 0.006 meters is placed at each of the six corners of the SSAS. A total moment of inertia is calculated using the parallel axis theorem. An example of theses calculations can be seen in Table 4.5.3 below.

Table 4.5.3: Example Moments of Inertia

| | $d_{y'yy}$ | $I_{y'}$ ($m^4$) | $I_{yy}$($m^4$) |
|---|---|---|---|
| 1 | 1.53 | $1.41*10^{-05}$ | $6.62*10^{-03}$ |
| 2 | 0 | $1.41*10^{-05}$ | $1.41*10^{-05}$ |
| 3 | 1.53 | $1.41*10^{-05}$ | $6.62*10^{-03}$ |
| 4 | 1.53 | $1.41*10^{-05}$ | $6.62*10^{-03}$ |
| 5 | 0 | $1.41*10^{-05}$ | $1.41*10^{-05}$ |
| 6 | 1.53 | $1.41*10^{-05}$ | $6.62*10^{-03}$ |

After the moments of inertias are calculated, the stresses acting on the individual I-beams are determined. The loading conditions on the truss are decoupled into pure bending about the y and z directions and a tensile force acting in the x direction. The loads are summarized in Table 4.5.4.

Table 4.5.4: Summary of Loading Condition

| Total Moments on the truss (Nm) | | | Radial Force (N) | Tangential Force (N) |
|---|---|---|---|---|
| Mx | My | Mz | Px | Py |
| `-1.06 | 54302 | 247321 | 1397270 | 29 |

Notice there is a moment in the x direction that causes torsion. This is considered to be trivial and can easily be remedied by rearranging the mass inside the townhouse. It is therefore considered to be zero. The loads in Table 4.5.4, above, combine to I-beam 6 to be in tension and I-beam 3 to be in compression. Figure 4.5.2 shows the configuration of the SSAS model.

Figure 4.5.2: Configuration of SSAS

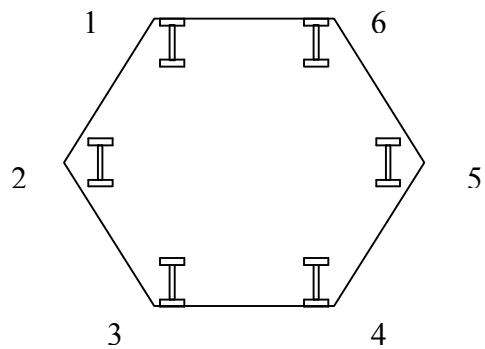


The loading on each I-beam can be seen in Table 4.5.5.

Table 4.5.5: Stresses and loads on Each I-beam

| | $\sigma_y$ | $\sigma_z$ | Px | σ due to tensile P | Total σ |
|---|---|---|---|---|---|
| 1 | 1.25E+07 | 1.03E+08 | 2.33E+05 | 8.25E+07 | -7.50E+06 |
| 2 | 0.00E+00 | 3.23E+07 | 2.33E+05 | 8.25E+07 | |
| 3 | 1.25E+07 | 1.03E+08 | 2.33E+05 | 8.25E+07 | -3.26E+07 |
| 4 | 1.25E+07 | 1.03E+08 | 2.33E+05 | 8.25E+07 | -7.50E+06 |
| 5 | 0.00E+00 | 3.23E+07 | 2.33E+05 | 8.25E+07 | |
| 6 | 1.25E+07 | 1.03E+08 | 2.33E+05 | 8.25E+07 | 1.98E+08 |

The negative signs indicate compression and the positive signs indicate tension.

The truss is made of aluminum. Not knowing the specific alloy being used, Al 7570 is chosen to give a basis for comparison. The properties of Al 7570 can be seen in Table 4.5.6.

Table 4.5.6: Material Properties of Al 7570

| Al 7570 | E (Pa) | Su (Pa) | Sy (Pa) |
|---|---|---|---|
| | 7.11E+10 | 5.72E+08 | 5.03E+08 |

As can be seen from the tables above, I-beam number 6 is in the greatest tension. Comparing the stress associated with I-beam 6 to the yield stress of Al 7570 it can be seen that the stress in the I-beam is lower than the yield stress of Al 7570. This creates a margin of safety of 1.5. Because this is the highest stress any member of the truss will see it can be assumed that the truss will not fail in tension.

I-beam 3 is in the greatest compression even though there is also a tensile stress from the radial loading that reduces this load. To find the buckling condition of the I-beam the critical buckling theory of a long slender member is used. The critical buckling load is determined for various lengths using:

$$P_{cr} = \frac{\partial^2 EI}{L^2}.$$

By comparing the applied force due to the stress on I-beam 3 to the critical loads calculated at different lengths from theory, it is shown that the applied load due to the stress is less than the critical load associate with an 11 meter long segment. Since the longest truss segment is only 13.7 meters long it can be assumed that no member of any truss is longer than half of 13.7 meters. This puts the applied stress on the I-beam well below the buckling condition of the truss. The truss has a MOS of 2.5 fro the buckling condition. Table 4.5.7 below shows a summary of the loads calculated by theory.

Table 4.5.7: Critical Buckling Conditions

| L (m) | Pcr (N) | σcr |
|---|---|---|
| 0.5 | $2.03*10^{+06}$ | $7.21*10^{+08}$ |
| 1 | $1.02*10^{+06}$ | $3.60*10^{+08}$ |
| 1.5 | $6.78*10^{+05}$ | $2.40*10^{+08}$ |
| 2 | $5.08*10^{+05}$ | $1.80*10^{+08}$ |
| 2.5 | $4.07*10^{+05}$ | $1.44*10^{+08}$ |
| 3 | $3.39*10^{+05}$ | $1.20*10^{+08}$ |
| 3.5 | $2.91*10^{+05}$ | $1.03*10^{+08}$ |
| 4 | $2.54*10^{+05}$ | $9.01*10^{+07}$ |
| 4.5 | $2.26*10^{+05}$ | $8.01*10^{+07}$ |
| 5 | $2.03*10^{+05}$ | $7.21*10^{+07}$ |
| 5.5 | $1.85*10^{+05}$ | $6.55*10^{+07}$ |
| 6 | $1.69*10^{+05}$ | $6.00*10^{+07}$ |
| 6.5 | $1.56*10^{+05}$ | $5.54*10^{+07}$ |
| 7 | $1.45*10^{+05}$ | $5.15*10^{+07}$ |

The above analysis shows that the truss will not fail at the SSAS in either tension or compression. It will, therefore, not need any additional support structure.

## 4.6 Townhouse Support Structure (Hubbard)

### *4.6.1 Purpose*

The module connection mechanisms (such as the Common Berthing Mechanisms, or CBMs) and the module connection points these mechanisms attach to were not designed to support the modules under gravity loading. Therefore it is necessary to support the module mass with external structure in order to relieve loads on these connections.

Also, it is necessary to connect the entire Townhouse structure to the appropriate ISS Truss segments, S5 and P5. It is highly desirable to minimize bending moment loadings on the ISS Truss Segments.

### *4.6.2 Approach*

It was design approach is to connect to the modules by connecting to their pinions, which are structural elements of the modules designed to support them during launch. These pinions can be attached to beams, and those beams then designed for stiffness, in order to minimize deflection at the connection points. Those beams are then designed to connect to a further strut/beam system, which connects the support beams to the ISS Truss segments S5 and P5. Finally, cables are employed to offload moments applied to the ISS Truss segments, and reduce total TSS mass.

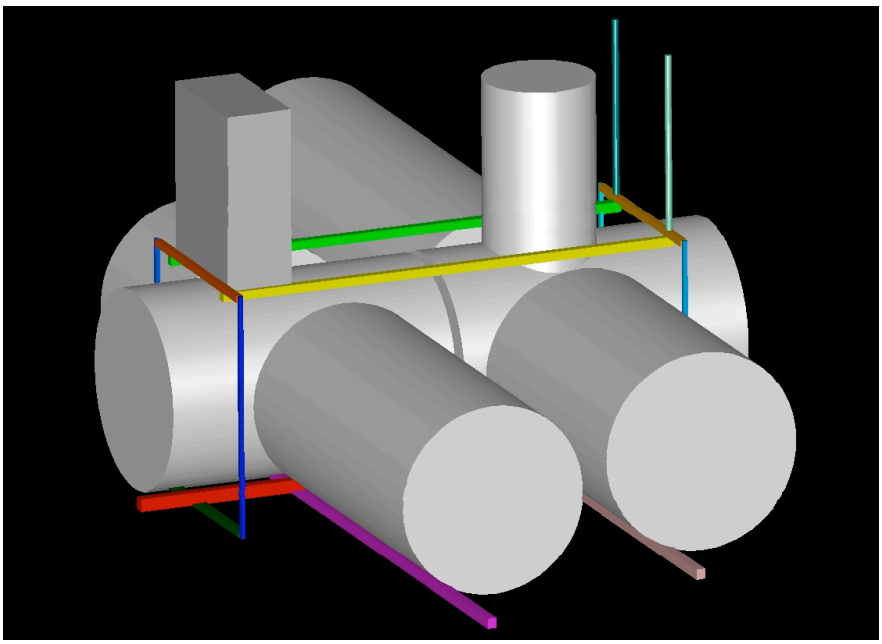

Figure 4.6.1:Townhouse Support Structure (TSS). Large cylinders are modules, while vertical cylinder is the inflatable pass-through. Gray block represents the inner rectangular section of P5/S5 to which the modules attach

### *4.6.3 Structural Layout*

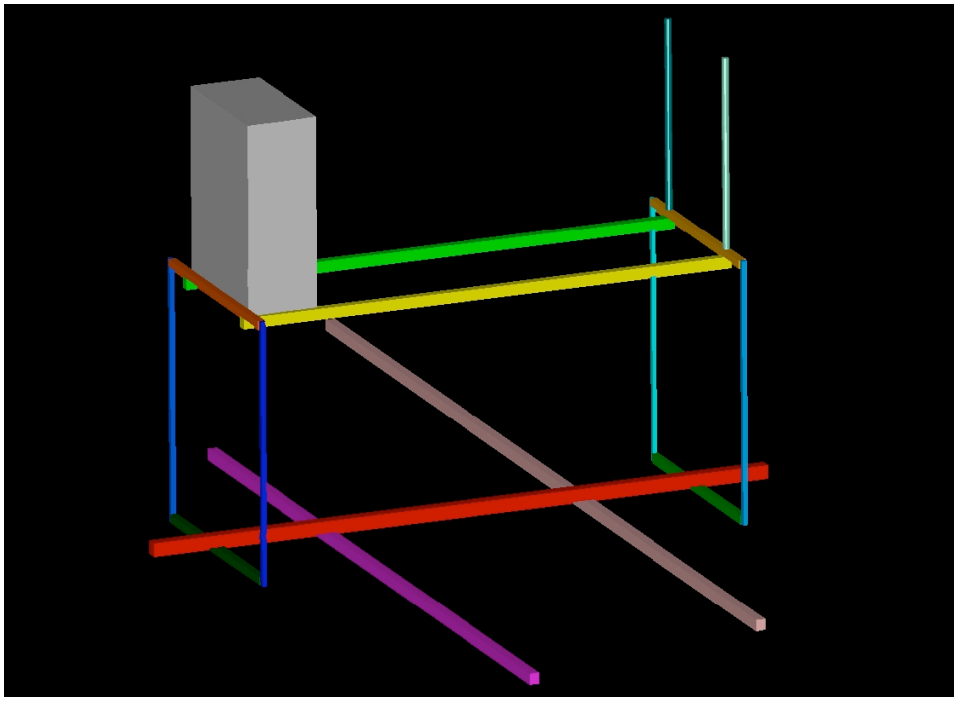

Figure 4.6.2 Townhouse Support Structure without modules.

Table 4.6.1: TSS Structural Element Color Code Legend w/ Abbreviations

| Element Color | Element Name | Townhouse A Abbreviation | Townhouse B Abbreviation |
|---|---|---|---|
| | Crossbeam 1 | THACB1 | THBCB2 |
| | Crossbeam 2 | THACB2 | THBCB3 |
| | Backbone | Backbone A | Backbone B |
| | Support Beam 1 | THASB1 | THBSB1 |
| | Support Beam 2 | THASB2 | THBSB2 |
| | Strut 1 | THAS1 | THBS1 |
| | Strut 2 | THAS2 | THBS2 |
| | Strut 3 | THAS3 | THBS3 |
| | Strut 4 | THAS4 | THBS4 |
| | Strut Support Beam 1 | THASSB1 | THBSSB1 |
| | Strut Support Beam 2 | THASSB2 | THBSSB2 |
| | ISS Connection Beam 1 | THAICB1 | THBICB1 |
| | ISS Connection Beam 2 | THAICB2 | THBICB2 |
| | Cable 1 | THACA1 | THBCA1 |
| | Cable 2 | THACA2 | THBCA2 |

Modules attach to the crossbeams via their pinions, or in the case of the Russian Research Module (RM), to circular support frames. This connection is assumed to be fixed. The crossbeams attach to the Backbone, with fixed connections. Townhouse nodes also attach to the Backbones by their pinions, which are assumed to be fixed connections. Backbones attach at either end to the Support Beams, with pin connections. Support Beams attach to the Struts with pin connections. Struts connect to Strut Support Beams with pin connections. Strut Support Beams connect to the ISS Connection Beams with pin connections. ISS Connection Beams attach to the inner rectangular section of the ISS Truss segments P5/S5 with pin connections at each attachment point.

### *4.6.4 Preliminary Assumptions*

Some important information about the nodes and modules is unavailable, so certain assumptions are made to proceed with analysis. It is assumed that the pinions are located at 20 cm from each end of the respective module or node. Modules and nodes are treated as rigid bodies, such that each pinion supports ½ of the total weight under gravity loading of its respective module or node. Further, it is assumed that the center of gravity of each module and node is located along its cylindrical axis.

It is assumed that the CBMs when engaged with the modules provide 20 cm of clearance between the modules, and that the Pressurized Mating Adapter (PMA) which attaches the RM to its respective node provides a clearance of 40 cm between the module and the node. Further, as little data available on the RM specifically, the RM is assumed to have a mass and length similar to Destiny, and to have connection points located similarly to the pinion locations of other modules (20 cm from each end of the module).

Finally, it is assumed that a 5% deflection was allowable across each connection mechanism, as little data about their performance under axial bending when engaged with the nodes and modules was available.

### *4.6.5 Material Selection*

It is desirable to optimize the TSS for minimal mass, and it is with this aim in mind that material selection was undertaken.

For bending elements, beam mass is directly proportional to cross-sectional area A and density ρ for the beam. Area is a function of the moment of inertia I of the beam, and moment of inertia is inversely related to modulus of elasticity E for the beam. Therefore, beam mass is proportional to the ratio ρ/E. Lower ratios of ρ/E will yield structures of lower mass.

| Table 4.6.2: Material Properties | | |
|---|---|---|
| 300 Series Aluminum[20] | | |
| Property | Value | Units |
| E | 72 | Gpa |
| Yield Stress | 152 | KPa |
| ρ | 2700 | $kg/m^3$ |

300 Series aluminum was found to be the most suitable material for the TSS. Its properties were treated as listed above. Also considered were other grades of aluminum, other grades of steel, Inconel, a selection of high-strength nickel-base alloys, and the HS 188 cobalt based alloy.

Also, a Safety Factor of 1.4 was applied, in compliance with Level 1 Requirement documents.[21]

[20] Department of Defense, MIL-HDBK-5H. METALLIC MATERIALS AND ELEMENTS. 1998.
[21] National Aeronautics and Space Administration, NASA -STD-5001. STRUCTURAL DESIGN AND TEST FACTORS OF SAFETY FOR SPACEFLIGHT HARDWARE. 1996.

### *4.6.6 Beam Design Methodology*

The first step the beam design is to determine where along the beam the loads are applied. Next, it is necessary to determine geometric constraints upon the beam; these constraints are dependant on how the beam connects to the other elements in the structure. Once connection determinations have been made, reaction forces can be determined.

For elements designed for bending stiffness, the moment-curvature relationship using discontinuity functions[22] can be applied to determine the non-dimensional displacement of the beam. By applying the modulus of elasticity of the material, and the allowable displacement across the connection mechanisms with the applied safety factor, the moment of inertia can be determined through the displacement relation. Dimensions of the beam cross-section can then be determined by selecting a cross-sectional geometry, and setting one parameter of that cross-sectional geometry as a function of the determined modulus of elasticity. The other cross-sectional dimensions can then be set so as to minimize cross-sectional area (and hence mass of the beam). For this design, it was selected to index beam width to the moment of inertia. An I-beam geometry was selected for the crossbeams, while a box beam geometry was selected for the backbones, as it was determined that the backbones must also bear torsion loading.

For elements designed for maximum allowable stress, maximum stress in the beam can be determined by applying discontinuity functions for the loading on the beam, and determining maximum moment within the beam. Maximum bending stress can then be determined as the yield stress of the beam material with the applied safety factor. By selecting a reasonable height for the beam, moment of inertia for the beam can be determined. Further cross-sectional dimensions can be determined by applying the resultant moment of inertia, selecting a cross-sectional geometry, and indexing a further cross-sectional geometry parameter to the calculated moment of inertia. Other cross-sectional parameters can be selected to minimize cross-sectional area. For this design, it was selected to index the beam width to the moment of inertia. All beams designed for yield stress were designed as I-beams.

### *4.6.7 Crossbeam Design*

Crossbeams extend from the first pinion of the first module mounted on the crossbeam to the last pinion of the second module mounted on the crossbeam. The crossbeam is connected to and supported by the backbone with a fixed connection.

[22] Hibbler, R.C. . Mechanics of Materials. Third. Upper Saddle River, NJ: Prentis Hall, 1997.

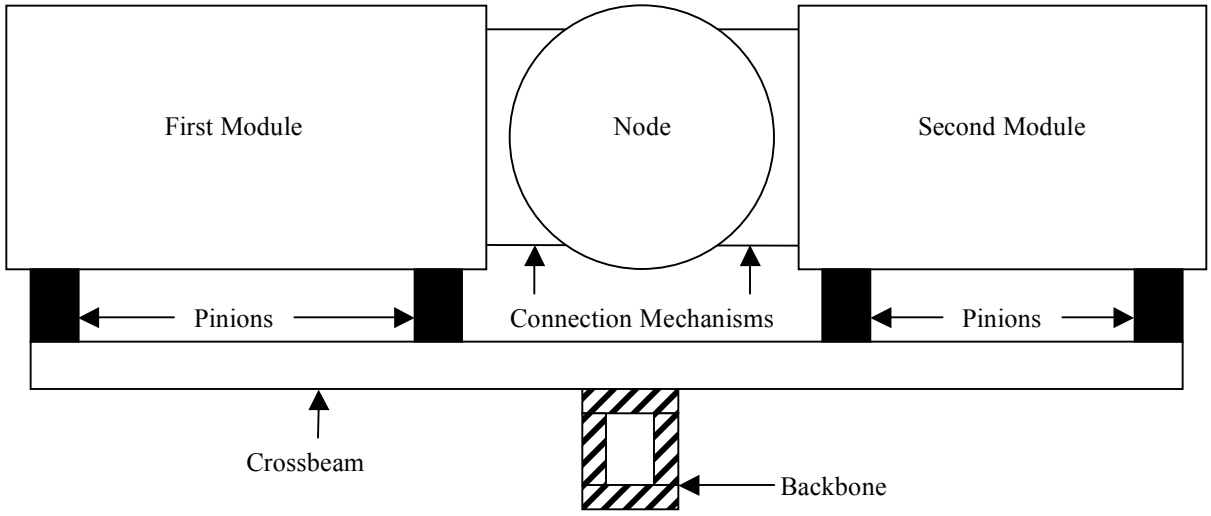


Figure 4.6.3. Arrangement of the crossbeam w/ respect to the modules, node, pinions, and backbone

Loads on the crossbeam are then the weight of the modules under artificial gravity loading, the reaction load at the backbone, and the reaction moment at the backbone.

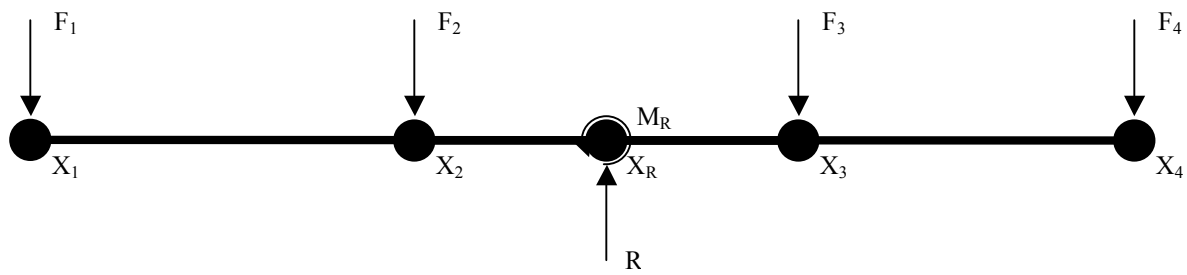


Figure 4.6.4 Crossbeam locations, with applied forces and moments

Table 4.6.3. Crossbeam locations (meters) and Loads (Forces in kN, Moments in kN-m)

| Crossbeam | $X_1$ | $F_1$ | $X_2$ | $F_2$ | $X_R$ | R | $M_R$ | $X_3$ | $F_3$ | $X_4$ | $F_4$ |
|---|---|---|---|---|---|---|---|---|---|---|---|
| THACB1 | 0 | 65.8 | 6.0 | 65.8 | 8.64 | 277 | 287 | 11.68 | 72.6 | 19.78 | 72.6 |
| THACB2 | 0 | 65.8 | 6.0 | 65.8 | 8.64 | 263 | 0 | 11.28 | 65.8 | 17.28 | 65.8 |
| THBCB1 | 0 | 72.6 | 8.1 | 72.6 | 10.74 | 187 | -786 | 13.38 | 21.0 | 16.88 | 21.0 |
| THBCB2 | 0 | 96.5 | 6.5 | 96.5 | 9.14 | 352 | 141 | 11.78 | 79.5 | 22.58 | 79.5 |

With these locations, we can set the deflection of the beam such that total deflection from the crossbeam ($X_R$) to the second pinion ($X_2$) or to the third pinion ($X_3$) is no greater than 5% of the distance from the crossbeam to that pinion point, and derive a moment of inertia from which we can determine the beam's cross-sectional geometry. For the crossbeams, we have selected an I-beam geometry:

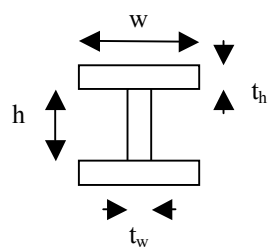


Fig. 4.6.5 I-beam cross-

Table 4.6.4. Crossbeam dimensions (m)

| Crossbeam | w | $t_w$ | h | $t_h$ | A ($m^2$) | L |
|---|---|---|---|---|---|---|
| THACB1 | 0.07 | 0.06 | 0.16 | 0.14 | 0.029 | 19.78 |
| THACB2 | 0.06 | 0.06 | 0.16 | 0.14 | 0.026 | 17.28 |
| THBCB1 | 0.08 | 0.06 | 0.16 | 0.14 | 0.032 | 16.88 |
| THBCB2 | 0.07 | 0.06 | 0.18 | 0.15 | 0.032 | 22.58 |

With the crossbeams fully determined, it is possible to plot their deflection under the loading conditions:

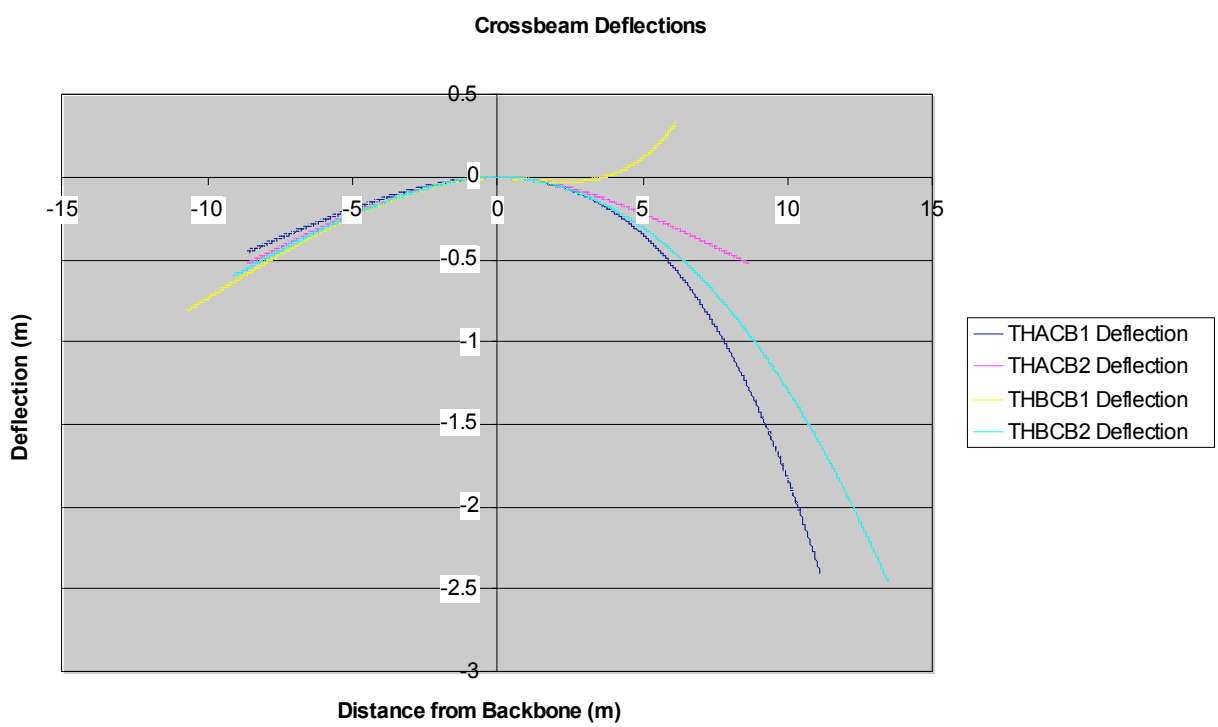


Deflection past points $X_2$ and $X_3$ is large. This is acceptable, however, as it is expected that the modules are not actually rigid bodies, and will deflect on their own. For these sections of the crossbeams, the crossbeams simply relieve bending in the module as though it were cantilevered about the pinion point. If this was a major concern, stiffness tolerances could be set on tip deflection.

### *4.6.8 Backbone Design*

The backbone extends from the first pinion of the first node to the last pinion of the second node. It supports the weight of the nodes and the crossbeams. It is supported by the support beams, and is attached to them with pin connections. Location of the support beams is determined by a 10 cm clearance for the modules.

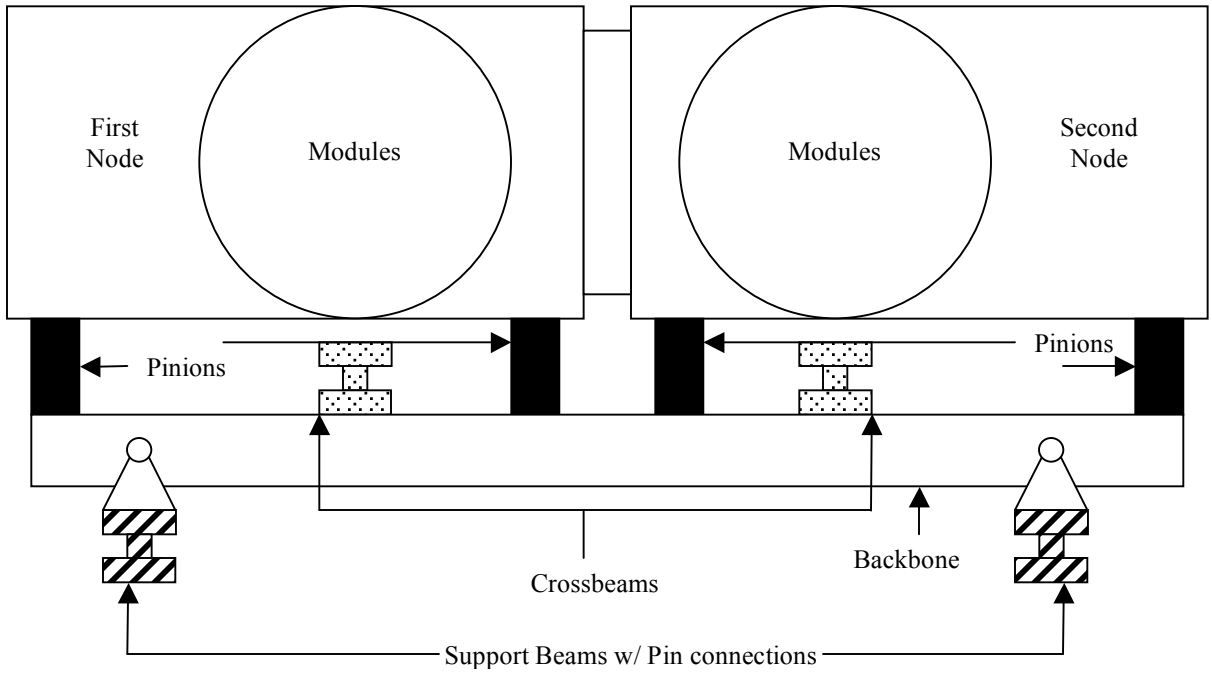


Fig. 4.6.7 Backbone with respect to modules, nodes, node pinions, crossbeams, and support beams

Loads on the backbone are thus the weight of the nodes under artificial gravity (applied at their pinions), the weight of the crossbeams under artificial gravity, the reaction loads of the crossbeams, and the reaction loads at the support beam connections.

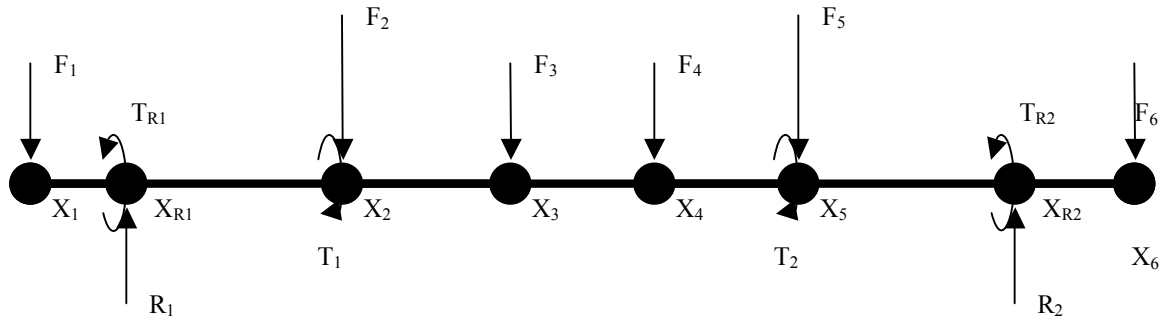


Fig. 4.6.8 Backbone loading. Applied Torques are the reaction moments of the crossbeams.

| Table 4.6.5: Backbone locations and loads (locations in meters and forces in kN) | | | | | | | | | | | | | | | | |
|---|---|---|---|---|---|---|---|---|---|---|---|---|---|---|---|---|
| Back-bone | $X_1$ | $F_1$ | $X_{R1}$ | $R_1$ | $X_2$ | $F_2$ | $X_3$ | $F_3$ | $X_4$ | $F_4$ | $X_5$ | $F_5$ | $X_{R2}$ | $R_2$ | $X_6$ | $F_6$ |
| Back-bone A | 0 | 77.5 | 1.35 | 440 | 4.1 | 292 | 6.3 | 77.5 | 6.9 | 77.5 | 9.1 | 275 | 11.85 | 455 | 13.2 | 96.3 |
| Back-bone B | 0 | 77.5 | 1.35 | 401 | 4.1 | 201 | 6.3 | 77.5 | 6.9 | 77.5 | 9.1 | 371 | 11.85 | 481 | 13.2 | 77.5 |

Bending within the beam can be determined with these locations and loads. Torsion is treated independently, though it will be considered in before applying reaction loads to the support beams. The moment of inertia can be determined by setting the maximum deflection between $X_3$ and $X_4$ to 5%, from which the cross-sectional geometry can be determined. A box-beam geometry has been selected for the backbones, due to torsion loading.

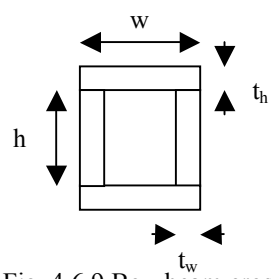

Fig. 4.6.9 Box-beam cross-

Table 4.6.6: Backbone dimensions (m)

| Backbone | w | $t_w$ | h | $t_h$ | A ($m^2$) | L |
|---|---|---|---|---|---|---|
| Backbone A | 0.10 | 0.04 | 0.18 | 0.08 | 0.03 | 13.2 |
| Backbone B | 0.09 | 0.04 | 0.18 | 0.08 | 0.03 | 13.2 |

With the backbones fully determined, we can plot backbone deflection:

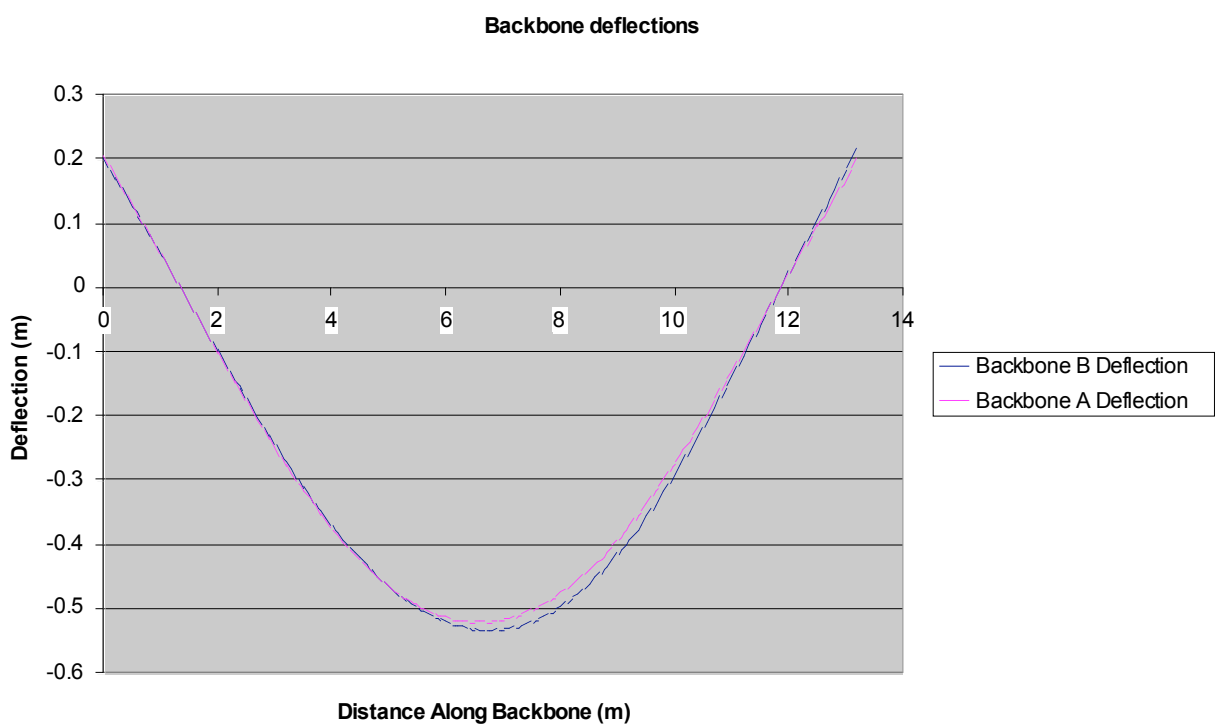


Figure 4.6.10

Again, deflection over the total beam is large. However, the nodes can be expected to bend to some extent, so total bending would again be below that plotted values.

Torsion within the backbone can be determined using standard torsion relations, and assuming that the angular displacement between the support beams is zero.

Table 4.6.7:
Backbone Torsions (kN-m)

| $T_1$ | $T_2$ | $T_{R1}$ | $T_{R2}$ |
|---|---|---|---|
| 287 | 0 | 376 | -664 |
| -786 | 142 | -792 | 144 |

### *4.6.9 Support Beam Design*

Support beam design is much simpler. The support beams support the backbone load, with the backbones attached to the center of the support beams. They are attached at either end to the struts by pin connections. The length of the support beams are determined by the width of the nodes, plus a clearance of 10 cm on either side of the node.

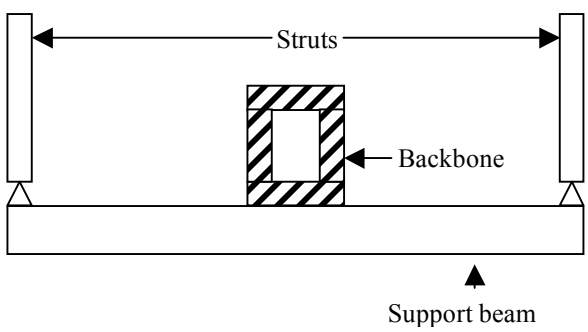


Fig. 4.6.11 Support beam w/ respect to backbone and struts

The loads acting on the support beams are then the reaction torsion of the backbone, which act as a moment on the support beams, half the weight of the backbone, and the reaction force of the backbone.

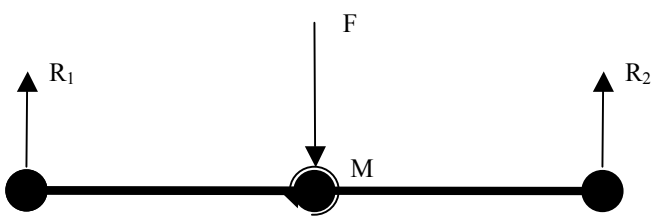


Fig. 4.6.12 Support beam loading

Table 4.6.8: Support beam loads (forces in kN, moments in kN-m)

| Shear Load | Moment Load | $R_1$ | $R_2$ | M max |
|---|---|---|---|---|
| 445 | 376 | 303.0 | 142 | 376 |
| 461 | -663 | 88.9 | 372 | 872 |

With the maximum moment, we can set a reasonable bean height and determine the moment of inertia. By selecting a cross-sectional geometry, we can determine beam dimensions.

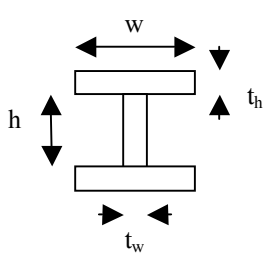


Fig. 4.6.13 I-beam cross-section

Table 4.6.9: Support Beam Dimensions (m)

| Support Beam | w | $t_w$ | h | $t_h$ | A ($m^2$) | L (m) |
|---|---|---|---|---|---|---|
| THASB1 | 0.10 | 0.08 | 0.14 | 0.13 | 0.04 | 4.68 |
| THASB2 | 0.13 | 0.10 | 0.19 | 0.17 | 0.06 | 4.68 |
| THBSB1 | 0.13 | 0.10 | 0.19 | 0.17 | 0.06 | 4.68 |
| THBSB2 | 0.15 | 0.12 | 0.22 | 0.20 | 0.09 | 4.68 |

### *4.6.10 Strut Design*

Strut design is simple. Struts are elements under axial tension, with square cross-sectional area, supported by pin connections at either end. The loads they carry are the support beam reaction loads, plus ½ of the weight under artificial gravity of the support beams.

Table 4.6.10: Strut properties

| Strut | Load (kN) | Area ($m^2$) | Width (m) | length |
|---|---|---|---|---|
| THAS1 | 532 | 0.0064 | 0.08 | 5.5 |
| THAS2 | 371 | 0.0036 | 0.06 | 5.5 |
| THAS3 | 319 | 0.0036 | 0.06 | 5.5 |
| THAS4 | 603 | 0.0049 | 0.07 | 5.5 |
| THBS1 | 263 | 0.0036 | 0.06 | 5.5 |
| THBS2 | 602 | 0.0064 | 0.08 | 5.5 |
| THBS3 | 781 | 0.0081 | 0.09 | 5.5 |
| THBS4 | 167 | 0.0025 | 0.05 | 5.5 |

### *4.6.11 Strut Support Beam Design*

The strut support beams are attached to the struts at either end by pin connections. They are supported by the ISS connection beams. They are centered on the midpoint between the ISS connection beams, whose separation is determine by the width of the inner rectangle of the ISS Truss segments (3 m). The strut support beams are connected to the ISS connection beams by pin connections.

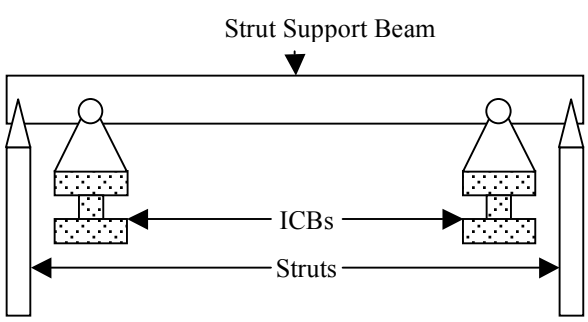


Fig. 4.6.14 Strut support beams w/ respect to struts and ICBs

The loads the Strut Support Beams must carry, then, are the tensions in the struts, plus the mass of the struts.


Fig. 4.6.15 Loads acting on strut support beams

Table 4.6.11: Strut support beam locations and loading (locations in m, forces in kN, moments in kN-M)

| Beam | Beam Length | $X_{R1}$ | $X_{R2}$ | $F_1$ | $F_2$ | $R_1$ | $R_2$ | $M_{Max}$ |
|---|---|---|---|---|---|---|---|---|
| THA SSB1 | 4.68 | 1.59 | 3.09 | 533 | 372 | 704 | 201 | 848 |
| THA SSB2 | 4.68 | 1.59 | 3.09 | 320 | 603 | 19 | 904 | 509 |
| THBS SB1 | 4.68 | 1.59 | 3.09 | 264 | 603 | -94 | 962 | 420 |
| THBS SB2 | 4.68 | 1.59 | 3.09 | 782 | 168 | 1430 | -483 | 124 |

With the maximum moment, we can set a reasonable bean height and determine the moment of inertia. By selecting a cross-sectional geometry, we can determine beam dimensions.

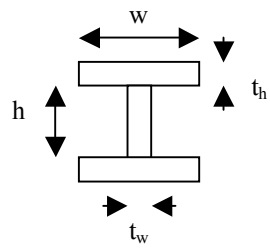

I-beam cross-section

Table 4.6.12: Strut Support Beam Dimensions (m)

| Support Beam | w | $t_w$ | h | $t_h$ | A ($m^2$) | L (m) |
|---|---|---|---|---|---|---|
| THASSB1 | 0.14 | 0.10 | 0.18 | 0.16 | 0.04 | 4.68 |
| THASSB2 | 0.11 | 0.08 | 0.16 | 0.14 | 0.03 | 4.68 |
| THBSSB1 | 0.11 | 0.08 | 0.15 | 0.13 | 0.03 | 4.68 |
| THBSSB2 | 0.14 | 0.12 | 0.21 | 0.19 | 0.02 | 4.68 |

### *4.6.12 ISS Connection Beam Design*

The ISS Connection beams support the strut support beams through pin connections. They are attached to and supported by the inner rectangle of the ISS Truss segments P6/S6 at the connection points with pin connections. They are further supported by cables, attached the point the Strut Support Beams are attached with a pin connection.

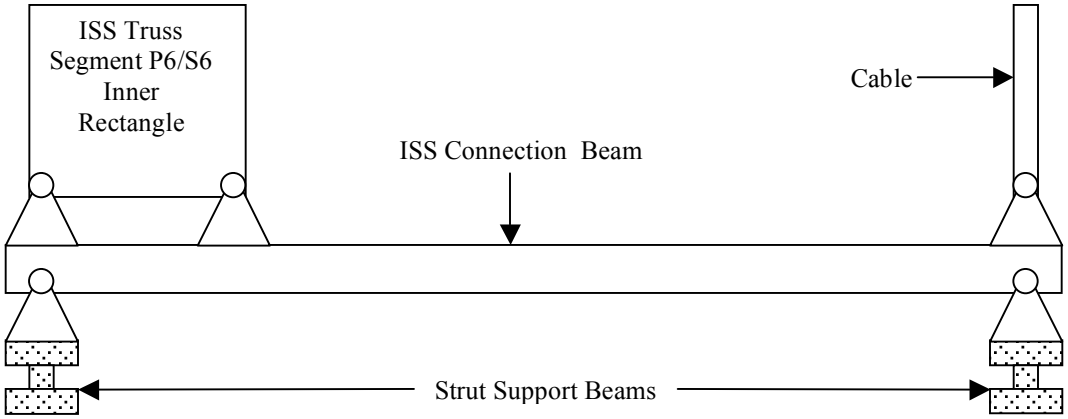


Fig. 4.6.17 ISS connection beam w/ respect to strut support beam, cable, and ISS Truss segment

The loads on the beam are then the reaction loads for the strut support beams, half of the weight under artificial gravity of the strut support beams, and the reaction loads of the cable and the ISS Truss segment. These reaction loads can be determined by static relations and setting the reaction loads on the ISS Truss as equal (thus reducing moment induced on the ISS Truss segment.)

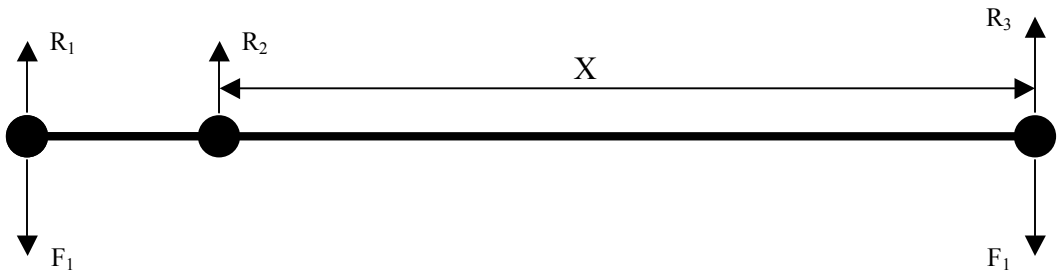


4.6.18 Loading on the ISS connection beams

Table 4.6.13: ISS Connection Beam locations and loads
(locations in m, forces in kN, moments in kN-m)

| Beam | Beam length | X | F1 | F2 | R3 | R1 | R2 | M max |
|---|---|---|---|---|---|---|---|---|
| THAICB1 | 10.5 | 7.5 | 537 | 322 | 483 | 188 | 188 | 403 |
| THAICB2 | 10.5 | 7.5 | 376 | 606 | 274 | 353 | 353 | 758 |
| THBICB1 | 10.5 | 7.5 | 266 | 787 | 135 | 459 | 459 | 984 |
| THBICB2 | 10.5 | 7.5 | 605 | 173 | 576 | 101 | 101 | 216 |

With the maximum moment, we can set a reasonable beam height and determine the moment of inertia. By selecting a cross-sectional geometry, we can determine beam dimensions.

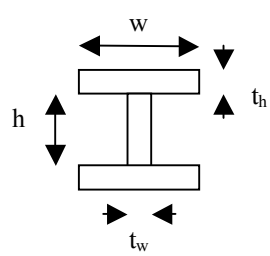


I-beam cross-section

Table 4.6.14: ISS Connection Beam Dimensions (m)

| Support Beam | w | $t_w$ | h | $t_h$ | A ($m^2$) | L (m) |
|---|---|---|---|---|---|---|
| THAICB1 | 0.10 | 0.08 | 0.14 | 0.13 | 0.04 | 10.5 |
| THAICB2 | 0.12 | 0.10 | 0.18 | 0.16 | 0.06 | 10.5 |
| THBICB1 | 0.13 | 0.11 | 0.20 | 0.18 | 0.07 | 10.5 |
| THBICB2 | 0.08 | 0.07 | 0.12 | 0.11 | 0.03 | 10.5 |

### *4.6.13 Margins of Safety*

Margins of Safety are listed below for the two townhouse support structures:

Table 4.6.15

| Townhouse | Element | Load | Margin of Safety (%) |
|---|---|---|---|
| Townhouse A | THAICB2 | Artificial Gravity (full) | 4.2 |
| Townhouse B | THBSSB2 | Artificial Gravity (full) | 3.6 |

### *4.6.14 Table of Masses*

Below is a table of masses for the TSS:

| Table 4.6.16 | | |
|---|---|---|
| Element Type | Mass Total | % of Basic |
| Crossbeams | 6000 | 29 |
| Backbones | 2000 | 10 |
| Support Beams | 3000 | 14 |
| Struts | 1000 | 5 |
| Strut Support Beams | 3000 | 14 |
| ISS Connection Beams | 5000 | 24 |
| Connections | 1000 | 5 |
| Basic Mass Total | ***21000*** | |
| Townhouse A Total (10% Margin) | **10000** | |
| Townhouse B Total (10% Margin) | **12000** | |
| Total Mass (10% Margin) | 23000 | |
| % of Total Townhouse Mass | 12 | |

## 4.7 Module Loading Analysis (Blaine)

Since SSP will employ ISS modules in loading situations other than microgravity, the structural integrity of the modules has to be analyzed. The modules are modeled as a thin-walled pressure vessels made from space grade aluminum 2219. This becomes a very conservative estimate since the actual modules are constructed with ribs and stringers, as well as outer micrometeoroid shielding. Since specific material composition for the various modules is not readily available, a conservative approach is within reason.

On SSP, the harshest loading for these modules occurs at the townhouses on either side of the station at a spin for 1g. In the townhouse configuration the Modules are cantilevered from nodes on the ends of the central trusses. The nodes that connect to the central truss have two modules cantilevered in the positive and negative Y direction. Additionally, they have the second node and its corresponding modules cantilevered from the axial berthing point. Even the moment from one module cantilevered from the node induces high stress concentrations just around the connections.

Using simple force and moment balance equations, the moment and reaction from individual modules cantilevered from the node were calculated. The mass was assumed evenly distributed along the length of the modules. This allows the mass to be treated as a point load located at the module's center. The table below gives the forces for individual modules connected to the node when unsupported.

| **Table 4.7.1** Module | Radius (m) | Length (m) | Mass (kg) | Moment (N) | Reaction Force (N) |
|---|---|---|---|---|---|
| Columbus | 2.24 | 6.87 | 1.93 x 104 | 6.50 x 105 | 1.89 x 105 |
| Donatello | 2.29 | 6.40 | 1.32 x 104 | 4.13 x 105 | 1.29 x 105 |
| Leonardo | 2.29 | 6.40 | 1.32 x 104 | 4.13 x 105 | 1.29 x 105 |
| Raffaello | 2.29 | 6.40 | 1.32 x 104 | 4.13 x 105 | 1.29 x 105 |
| US Lab | 2.15 | 8.50 | 1.45 x 104 | 6.05 x 105 | 1.42 x 105 |
| Cupola | 1.50 | 1.50 | 1.88 x 103 | 1.38 x 104 | 1.84 x 104 |
| JEM ELM-PS | 2.20 | 3.90 | 3.81 x 103 | 7.29 x 104 | 3.74 x 104 |
| JEM PM | 2.20 | 11.20 | 1.59 x 104 | 8.73 x 105 | 1.56 x 105 |
| Node 1 | 2.30 | 5.50 | 1.53 x 104 | 4.13 x 105 | 1.50 x 105 |
| Node 2 | 2.24 | 6.71 | 1.53 x 104 | 5.03 x 105 | 1.50 x 105 |
| Node 3 | 2.24 | 6.71 | 1.55 x 104 | 5.10 x 105 | 1.52 x 105 |

The diagram below shows a simplified model of how the nodes are loaded in the townhouse. The smaller cylinder represents a module connected to the berthing point of the node unsupported.

Bednar's equations from the pressure vessel

handbook were used to calculate the stress on pressure vessels from external loading like those modeled for the modules. Where the stress due to a tangential moment, longitudinal moment, and radial load are found by the following equations:[23]

$M_L$

P

$M_t$

$$\sigma_p = C_p(P/t^2)$$

$$\sigma_L = C_{LL}(M_L/t^2R\beta)$$

$$\sigma_t = C_t(M_t/t^2R\beta)$$

Where *t* is the thickness of the pressure vessel, R is the radius of the structure, and β is the berthing radius over the vessel radius times 0.875. The coefficients $C_t$, $C_{LL}$, and $C_p$ are values taken from tables that relate β to γ, where γ is the R/*t*.

The table shows the values for the Node 2/3 structure. The material properties are taken from Aluminum (Al 2219-T8).

Internal pressure is a helpful value for calculating hoop stress:

$$\sigma_{hoop} = pR/t$$

which contributes to the stiffness of the modules.

| Node properties | |
|---|---|
| Internal Pressure (Pa) | $1.01 \times 10^5$ |
| Node Radius R (m) | 2.30 |
| Berthing Radius r (m) | 1.20 |
| β | 0.457 |
| $C_{ll}$ | 0.0750 |
| Ct | 0.280 |
| γ | 0.00 |
| Node thickness *t* (m) | $6.05 \times 10^{-3}$ |
| Material property | |
| ν | 0.330 |
| E | $7.31 \times 10^{10}$ |

Table 4.7.2

Looking at JEM-PM, the individual module with the largest moment on the node, the loading produces a max stress of 638 GPa

Table 4.7.3

**Table 4.7.3: Stress in Node due to JEM-PM**

| | Longitudinal | Tangential |
|---|---|---|
| Stress from M (Pa) | $1.71 \times 10^8$ | $6.38 \times 10^8$ |

From Roark's the local buckling strength is calculated for the nodes, using the equation[24]

[23] Bednar, Henry H. *Pressure Vessel Design Handbook*. 2nd Edition. New York, New York: Van Nostrand Reinhold, 1985

[24] Young, Warren C. and Budynas, Richard G., *Roark's Formulas for Stress and Strain*. 7th Edition. New York, New York: McGraw-Hill 2002

$$S_y = \frac{E}{\sqrt{3} * \sqrt{(1-v^2)}} \frac{t}{r} \times 40\%$$

and yield strength is known from the material properties of Al 2219. This produces the results, with a safety factor of 2, as shown in the table below

Table 4.7.4

| | |
|---|---|
| Buckling Strength (Pa) | $4.70 \times 10^7$ |
| with SF 2 | $2.35 \times 10^7$ |
| Yield Strength (Pa) | $3.52 \times 10^8$ |
| with SF 2 | $1.76 \times 10^8$ |

The results demonstrate that the stress induced from the moments of the cantilevered modules does not exceed the yield strength of the material. However, due to the stress concentration around the connection, the nodes will undergo local buckling as the stress exceeds the local buckling strength by a whole order of magnitude. This failure in the structure indicates that the modules must be reinforced for the station to survive.

## 4.8 Cable Supports (Blaine)

In order to cut down on mass and remove any moment from the central truss connection to the townhouse, cables are attached to the townhouse support structure. Four cables attach to the cantilevered end of the townhouse support structure and connect along the S0 truss.

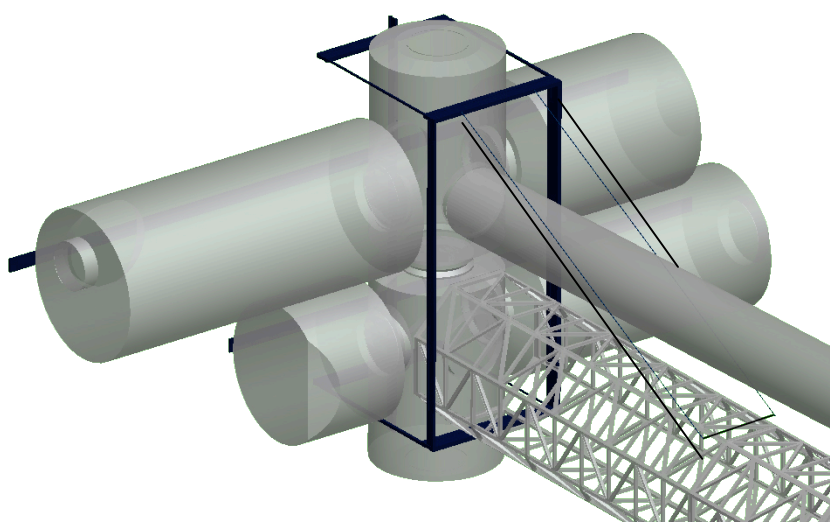

Fig. 4.8.1

Tension is added or removed from the cables in order to eliminate any moment from the central truss induced by the townhouse. Since the station is spinning, and spins at different rates, the townhouse will be under different loading conditions, and the moment on the central truss will vary with spin rate. Each cable is monitored by a tension sensor which is read by a control system in order to adjust the tension of the cables.

As with all structural components for space, material selection for the cables is very important. Launching new mass becomes the largest constraint for building in space, so the cables must be made from an extremely light but strong material. After analyzing different materials, a Kevlar/Aramid fiber was chosen. As seen in the graph below, this material has a specific strength of approximately 2000kNm/kg[25].

This high strength to weight ratio offers a tensile strength of 3.9 GPa. Comparing the aramid material to more traditional ones such as steel alloys, as shown in the table below, reveals the aramid fiber possesses nearly triple the strength and 1/6$^{th}$ the density. Nylon boasts a lower density than the aramid fiber, but only has a yield strength of about 600 MPa.

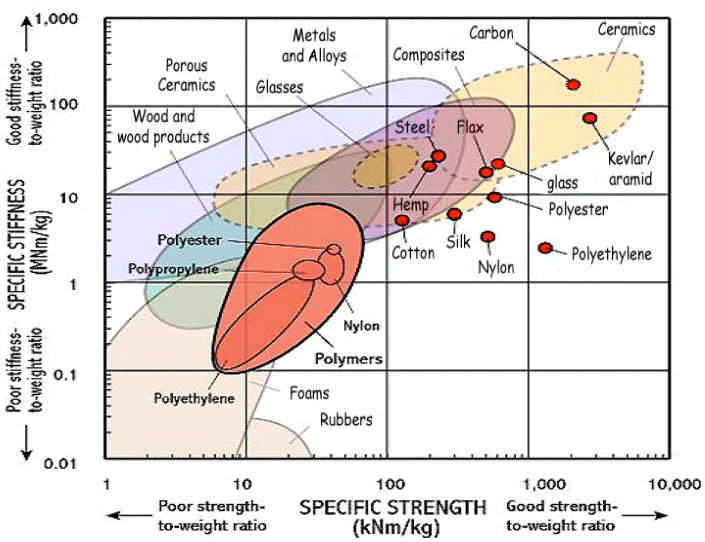


Fig. 4.8.2

In the event a cable breaks, each of the remaining cables is designed to withstand half of the maximum tension individually. Since the maximum tension for any set of cables is 567,000 kN, the cables thickness are driven by this loading condition. Once again, the equation $\sigma = F/a$ is employed. With a tensile strength of 3.93 GPa, the aramid fiber cables must have a radius of 1 cm in order to withstand and maintain a safety factor of 2.

The cables extend from the townhouse support structure and connect to the S0 truss 3 m from the center. This gives the cables a length of 39.7 m per each cable. Multiplying by the aramid fiber density, the four cables will give a combined weight of 66.4 kg.

The cable's tension is adjusted by two large winches per townhouse that attach to the central truss.

[25] "Ropes." 14 Apr 2006 <http://www-materials.eng.cam.ac.uk/mpsite/short/OCR/ropes/ropes.pdf>

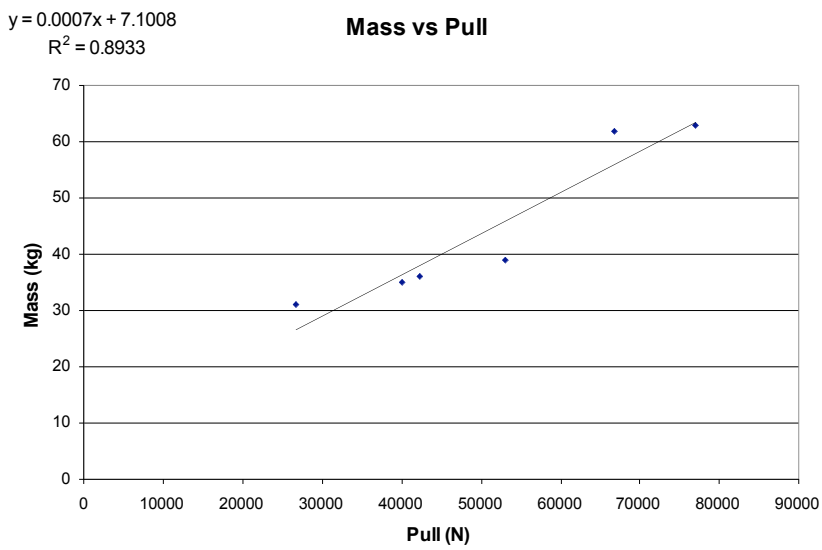


SSP will employ an electric winch system, scaled up from a self-recovery winch used on many four-wheel drive vehicles. This type of winch was chosen because of its higher line pull to weight ratio. In order to gauge the magnitude of the winch, linear regression curve was fitted to data from smaller existing electric winches. From this trend, a prediction was made to understand the scope of the winches to be added to the station. Townhouse A needs to tension two cable pairs, one to 255 kN and the other to 508 kN. Using the ratio above, this results in one winch weighing 186 kg and 363 kg. This total of 549 kg theoretically includes cable weight, since the data used to predict the mass of the winch includes cables. Adding the aramid cables onto this gives a conservative estimate just shy of 620 kg for Townhouse A. Doing the same for Townhouse B which requires maximum tensions of 567 kN and 153 kN yields two winches with masses of 404 kg and 114 kg. With the aramid cables added, the package weighs just over 600 kg.

## 4.9 Stability Arm Support (Blaine)

Three modules extend from Node 1 along the Y axis in order to promote station stability. Once again, since the modules and connections were designed solely for microgravity, and experience loading due to radial acceleration on SSP, they must be reinforced. In this case, bending loads are negligible since CEV will dock at low speeds, spin up/down takes place over a number of hours, and attitude correction thrusters output a max of 12 N each. Since the stability arms spin about the Z axis, radial acceleration induces a force on the modules. This force becomes the driving factor for design of the structure.

Here is a representation of what the structure looks like.

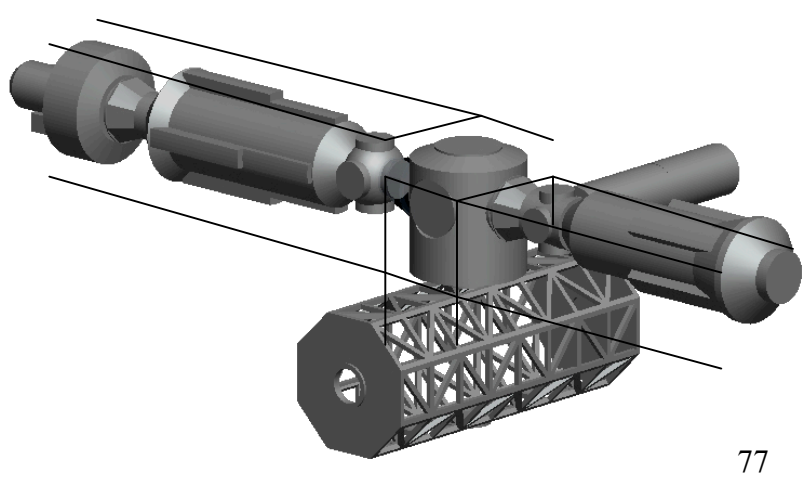

Aluminum rods form a box around Node 1 that connects to the S0 truss. Four rods extend out along the Y axis on either side

and clamp to the trunnion points on US Airlock and connect to four small aluminum I-beams bolted to the aft ring on Zvezda that attaches to the launch vehicle support structure.

Since the mass of the modules extends out along the plane of rotation, the modules will experience different loading conditions based on their location out from the center. Knowing that radial acceleration

$$F=ma$$

and

$$a_r = \omega^2 r$$

At a constant spin rate ω, it is clear that radial acceleration, and therefore force increases linearly as the modules extend out from the center. Assuming a uniform mass distribution for each module and a max spin of 4.4 rpm (0.461 rad/sec), integrating to find the total contribution of radial acceleration of each module times its mass distribution yields the force applied to the module. Summing the forces on the modules gives the total force on either side of the spin axis.

For the arm pictured on the left in the above image the total force is 101 kN. Airlock, positioned at 23.18 m along the Y axis sees a radial acceleration of just over ½ g. Using aluminum 6061, with a safety factor of 2, the diameter and mass of the support rods are determined. Since stress

$$\sigma = F/a,$$

and Al 6061 has a tensile strength of 310 MPa, the required area with a safety factor of 2 becomes

$$a = F(SF)/\sigma$$

so that the radius of the rod is simply

$$r = \sqrt{(a/\pi)},$$

and the rods in the positive Y have a radius of 7.5 mm. To extend to the trunnion points of US Airlock, the rods must be 23.5 m long. Since the density of aluminum is 2700 $kg/m^3$ the four rods contribute a combined mass of 44kg.

On the right side of the image, the stability arm sees a force of 70 kN. This contributes to a radius of 0.6 cm and combined mass for the four rods of 21.0 kg. Since Zvezda does not have trunnion points like those of the American modules, the rods must extend to the ring on the aft section of Zvezda that carries the vehicle's launch loads. To attach the rods to the ring, four I-beams will be bolted to the module to which the rods will connect. These I-beams are constructed from aluminum and are W 3 x 1.67 and have a moment of inertia of $9.32358393 \times 10^{-7}$ $m^4$. Using the bending equation for tip point load for a cantilevered beam

$$w_{max} = PL^3/3EI$$

yields that the I-beam tabs will deflect less than 1 mm.

The horizontal members of the box are in tension from both the right and left side of the stability arm. This tension of 171 kN is distributed across four members that have a radius of 1 cm and a combined mass of 14.3 kg. The vertical members of the box also have a radius of 1 cm and extend in the + Z direction 6.7 m adding a mass of 21.3 kg for the set of four.

Since the forces on either side of the stability arm are not equal, the central box deflects towards the larger force. In the image, the left side exceeds the right by 311 kN. This loading situation can be modeled as a cantilevered beam with the box height of 6.7 m acting as the length L of the beam. Taking the radius of the vertical members, the area of the rods is calculated and then used to calculate the structures moment of inertia. Using parallel axis theorem where

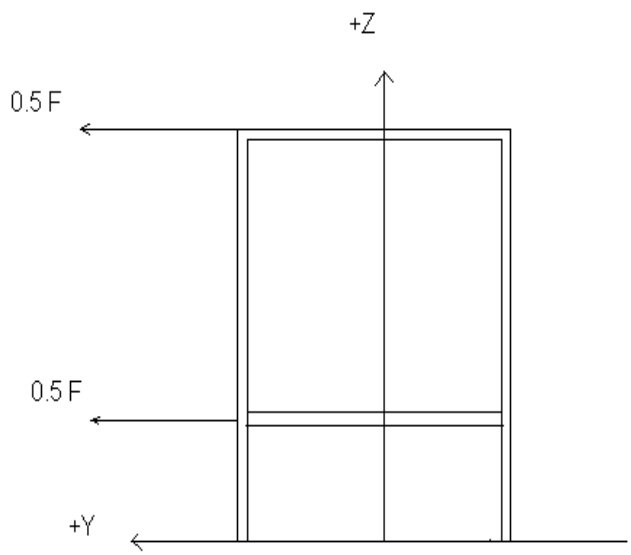


$$I=\Sigma\ (0.5ad^2)$$

and d, the distance from the neutral axis between the vertical members is 2.25m, I = 0.0119 $m^4$.

With Euler bending equation where max displacement is equal to

$$w_{max}=(Fa^2/6EI\ )(3L-a)$$

In this situation, the force is equal to the difference in the forces on the positive and negative side of the Z axis and *a* is the distance to the midpoint of the two force locations since the two halves can be consolidated as a single point load. The bending equation shows that the box will deflect just over 2 mm.

## 4.10 Vibrations (Ries)

Some quick vibrational analysis was done in order to determine if we passed through a resonance at any of our spin rates. The lowest frequency of the truss structure was found to be the "vibrating string" frequency (i.e. be treating the truss as a uniform string and the townhouse structures as the source of tension). This frequency was dependent on spin rate because of the different tension loads at different spin rates. The graph below shows that the structure never passes through the resonance as part of the spin up process. The lowest structural frequency of the truss structure was found to be 25Hz, which was well beyond the frequencies the structure would be passing through from spinning. The only other frequency which might excite a resonance would be the wobble of SSP's rotational axis (0.03Hz) but this frequency is lower than the rotation rate at which it occurs (0.075 Hz). Therefore, major resonant vibrations in SSP are negligible.

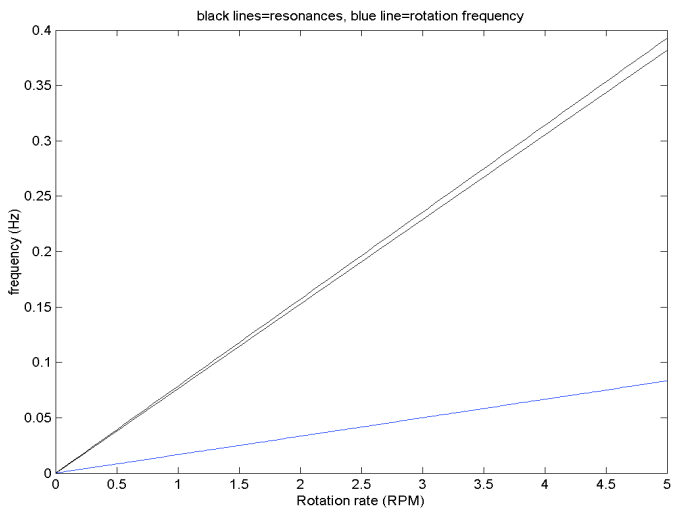


**Figure 4.10.1 Resonance and rotation frequencies**

## 4.11 Margin of Safety Table (Eckert)

Table 4.11.1 Margin of Safety

| Module | Safety Factor | Margin of Safety |
|---|---|---|
| Townhouse A Support | 1.4 | 0.50 |
| Townhouse B Support | 1.4 | 0.50 |
| Townhouse Cables | 1.4 | 1.86 |
| Inflatable | 1.4 | 0.43 |
| Stability Arm Support | 1.4 | 0.43 |

# V. Life Support

## 5.1 Food/Water (Rosendall)

Several types of food are taken aboard spacecraft. Rehydratable food and beverages are the abundant form for consumables aboard SSP, primarily because they do not require refrigeration, which saves power, and also because of their relative ease of operation. Before consumption, water is simply added to the food pack through a special tube, and the pack may then be heated in the convection oven. The menu of rehydratable food is varied and flexible; astronauts have many options including shrimp cocktail, veal in barbeque sauce, and beef pot roast. Though food is primarily in rehydratable form, other types of food can be found aboard SSP.

Food can also be thermostabilized, or heat processed to destroy unwanted enzymes and microorganisms. Intermediate moisture foods have about 15 to 30 percent moisture. They have a soft texture and may be eaten without any further preparation. Dried fruit or dried beef are two examples of food found in this category. Lastly, natural form foods, such as granola and other snacks, may also be eaten without preparation and are located in a pantry aboard SSP.[26]

The daily food/water mass allotments for each astronaut were obtained as a trade study of the ISS consumables budget[27], daily recommended human water intake, NASA food mass recommendations (given an abundance of rehydratable foods), and NASA's minimum water limit. The ISS consumables budget is as follows:

Table 5.1.1. ISS Consumables Budget

| Consumable | Design Load (kg/person-day) |
|---|---|
| Dry Food | 0.62 |
| Water (in food) | 1.15 |
| Water (drinking) | 1.6 |

Studies yielded varying recommended daily water intake levels, including one where 8 cups (1.82 kg) per person-day is recommended and one that suggested that 6 cups per day (1.37 kg) is excessive. Considering that NASA's emergency daily limit for an astronaut's potable water is 2.84 kg, the daily water per person had to be closer to this number, meaning that the astronauts will have water in excess of what their body

[26] Food for Space Flight, NASA, 2002, http://spaceflight.nasa.gov/shuttle/reference/factsheets/food.html.
[27] Akin, David L. ENAE 483/788D – Lecture #17, Space Life Support Systems, http://spacecraft.ssl.umd.edu/academics/483F05/483L17.life_support/483L17.life_support.2005.pdf.

typically needs in a partial gravity environment.[28] The total water per person-day on SSP is set at 3 kg.

When determining the daily food mass aboard SSP, it was important to review the NASA Standard 3000, and in particular the section highlighting food masses as a function of the amount of rehydratable food. A graph that illustrates this balance of food and water given an abundance of rehydratable food is shown below:

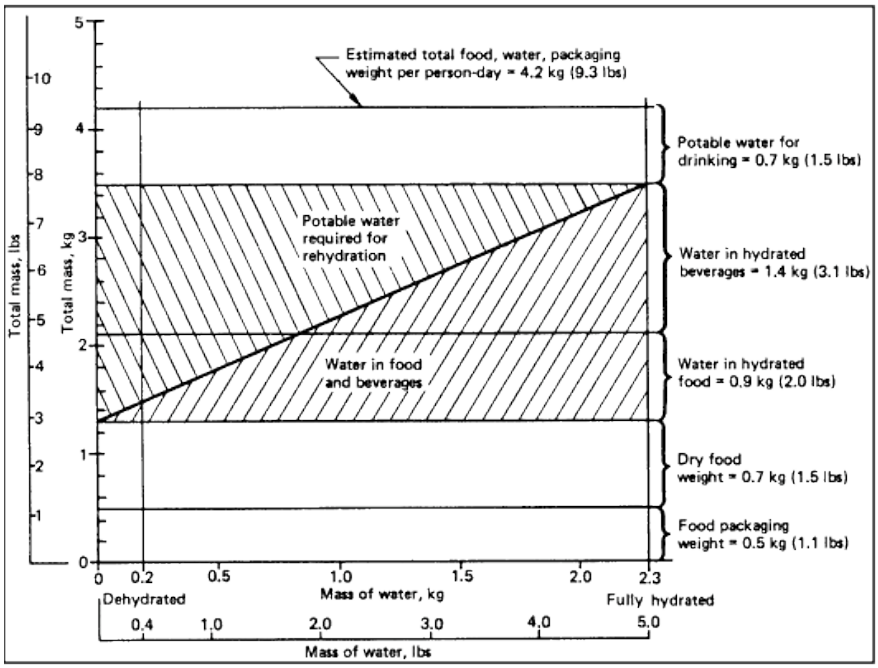

Fig 5.1.1. NASA Food Mass Breakdown

The masses in Figure 5.1.1 are as follows: 0.7 kg for dry food, 0.9 kg for water from food, 0.7 kg for drinking water, 1.4 kg for water from beverages, and 0.5 kg for food packaging. The values for SSP were taken from these numbers, with increased masses for dry food and food packaging as a result of the abundance of rehydratable food:

Table 5.1.2. SSP Consumables Budget

| SSP Consumable | SSP Design Load (kg/person-day) |
|---|---|
| Dry Food | 0.8 |
| Water (drinking) | 0.7 |
| Water (in food) | 0.9 |
| Water (in beverages) | 1.4 |
| Food Packaging | 0.75 |

[28] NASA Standard 3000: Man-Systems Integration Standards, Revision B, July 1995. http://msis.jsc.nasa.gov/.

The food masses could be determined by looking at previous examples of consumables budgets, and the volume of water storage was found because the density of water is known, as is its method of storage. However, the volume of food aboard the station had to be determined by looking at various food packaging techniques, and in particular those dealing with the storage of rehydratable food. The volume of food/packaging per person-day was determined by reviewing a study conducted by the Whirlpool Corporation, in which improvements were made to the food/beverage packaging on the Manned Orbiting Laboratory.[29] A suitable ration pack system was devised, with the volume of one pack equaling 0.0032 $m^3$. The extensive study outlined various ways that an eclectic menu of foods, sufficient for the nutritional and dietary needs of the astronauts, could be stored in such a ration pack:

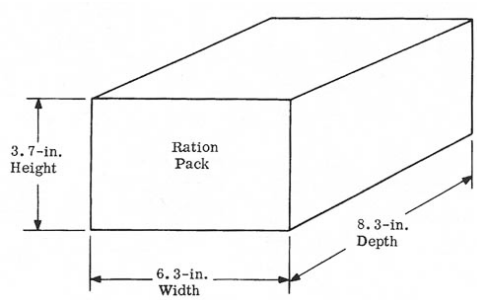

Fig 5.1.2. Ration Pack Dimensions

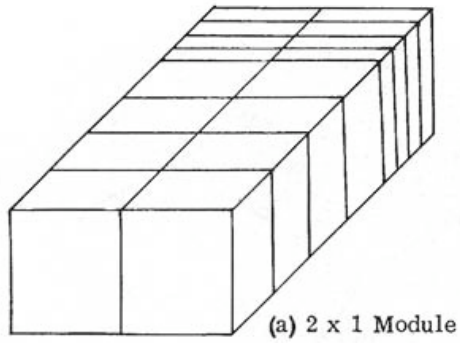

Fig 5.1.3. Ration Pack Division

Figure 5.1.2 shows the dimensions of such a ration pack, while Figure 3 shows one of the ways that 16 portions could be stored in the ration pack. These 16 portions include 4 rehydratable food portions, 4 liquid or beverage portions, and 8 bite-sized snack portions.

For the three year mission, the total mass of food (including packaging) aboard SSP is 11,200 kg. The total volume of food and packaging is 23 $m^3$. These figures were obtained while taking into account the mission duration, a crew size of six, and a ten percent emergency factor.

[29] Roth, Norman G. Systems Analysis of Manned Orbiting Laboratory Feeding System, Whirlpool Corporation, http://history.nasa.gov/SP-202/sess1.7.htm.

## 5.2 Water Provision (Ling)

### *5.2.1 Daily Human Water Needs / Clothes*

The following table is originally from a NASA document[30], but has been modified to describe the daily water allotment for Space Station Phoenix:

Table 5.2.1. Daily Water Allotment

| | |
|---|---|
| Oral Hygiene Water [kg/p-d] | 0.363 |
| Hand / Face Wash Water [kg/p-d] | 4.08 |
| Urinal Flush Water [kg/p-d] | 0.494 |
| Laundry Water [kg/p-d] | 0 |
| Shower Water [kg/p-d] | 2.72 |
| Dishwashing Water [kg/p-d] | 0 |
| Drinking Water [kg/p-d] | 2 |
| TOTAL WATER [kg/p-d] | 9.63 |

It should be noted that there is no allowance for laundry water. The crew of Space Station Phoenix uses disposable clothes. A trade study was conducted and it was determined that laundry water is four times as massive and requires 16% more volume than disposable clothes. At 2.3 kg/p per change of clothes, 0.008 $m^3$/p per change of clothes, and 5 days between changes[31], the total mass of the disposable clothes is 2,520 kg. They occupy a volume of 8.76 $m^3$.

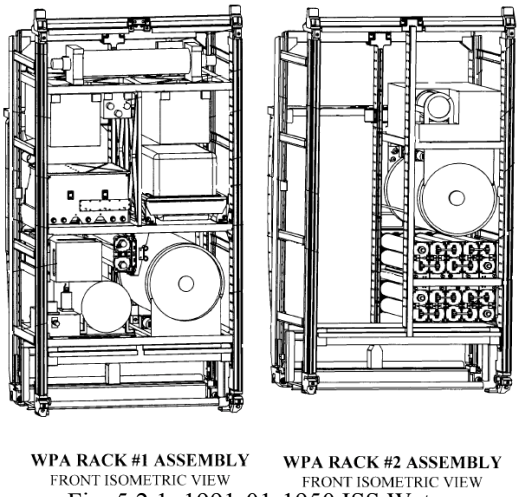


Fig. 5.2.1: 1991-01-1950 ISS Water Reclamation System Design

### *5.2.2 Water Reclamation*

To keep the mass of water consumables to a minimum, Space Station Phoenix uses the latest in water reclamation technology. The system that makes this possible is the Water Recovery System (WRS) by Hamilton Sundstrand. It replaces the old Russian system on the International Space Station and is the obvious choice for Space Station Phoenix. The WRS allows for the recycling of virtually all water including cabin humidity condensate, urine distillate, shower water, hand wash, oral hygiene waters, and EVA wastes. The system is

[30] Hanford, A.J. "Advanced Life Support Research and Technology Development Metric – Fiscal Year 2004." NASA Johnson Space Center. CR-2004-208944. 28 February 2006 <http://ston.jsc.nasa.gov/collections/TRS/_techrep/CR-2004-208944.pdf>

[31] Larson, Wiley J, and Linda K. Pranke. Human Spaceflight: Mission Analysis and Design. New York: McGraw Hill Companies, 1999.

located in two dedicated racks on Node 3. The major subcomponents of the WRS are the Urine Processor Assembly (UPA) and the Water Processor Assembly (WPA). The UPA takes up half a rack while the WPA takes up the other three halves[32].

Urine enters the UPA's Wastewater Storage Tank from the Waste and Hygiene Compartment. It is processed by the UPA with a process called Vapor Compression Distillation. Inside a rotating drum, the urine is boiled to a high temperature until it undergoes a phase change – from a liquid to a vapor and then back to a liquid[33]. The water is separated from the brine. The water is sent to the WPA for further processing while the brine is sent back to the Waste and Hygiene Compartment to be disposed of with the other solid wastes. After submitting a query to the manufacturer, Hamilton Sundstrand responded with a claim of an efficiency of about 85%. That is, for every 100 liters of urine processed, 85 liters of water is recovered. They also provided the following specifications:

Table 5.2.2. UPA Specifications

| | |
|---|---|
| Flow rate | 8.45 kg/day |
| Power | 424 W |
| Size | 0.707 m3 |
| Weight | 156 kg |

The WPA does the rest of the water processing on Space Station Phoenix. It uses a multifiltration approach. First, free gas and solid materials are removed by a particulate filter before the water is processed through a series of multifiltration beds. Any organic contaminants and microorganisms that are in the water are removed by a high temperature catalytic reactor assembly. The last step involves a check of the purity of the water. This is done by electrical conductivity sensors. Water that does not pass the test is reprocessed by the WPA. Water that passes is returned to the water storage tank[34]. Because there is only one inlet and one outlet, Hamilton Sundstrand claims an efficiency of near 100%.

[32] ISS Water Reclamation System Design. 1999-01-1950. Hamilton Standard Space Systems International, Inc. 17 April 2006.
[33] "Vapor Compression Distillation (VCD) Flight Experiment." NASA Marshall Space Flight Center. June 2002. NASA. 23 February 2006 <http://www.nasa.gov/centers/marshall/news/background/facts/vcd.html>.
[34] ISS Water Reclamation System Design. 1999-01-1950. Hamilton Standard Space Systems International, Inc. 17 April 2006.

Table 5.2.3. WPA Specifications[35]

| | |
|---|---|
| Flow rate | 227 kg/hour |
| Power | 915 W |
| Size | 2.12 m3 |
| Weight | 658 kg |

Because of the high efficiencies of the two systems, the water on Space Station Phoenix is much less than it would be without any reclamation.

Table 5.2.4. Total Masses of Water Needed for SSP

| Construction | Gravity Test | Mars Simulation |
|---|---|---|
| (3 people, 6 months) | (6 people, 10 months) | (6 people, 30 months) |
| 793 kg | 2,650 kg | 7,930 kg |

There is re-supply between Construction and the Gravity Test, and between the Gravity Test and the Mars Simulation, so therefore the most amount of water that will be needed at any given time on Space Station Phoenix is 7,930 kg. This occurs during the 30-month Mars Simulation. It should be noted that these numbers were calculated assuming an 85% efficiency for the combination of the UPA and WPA systems. In reality, the combination of the two systems is greater than 85%. However, picking this worst-case number allows for a margin of safety that is somewhere between 0 and 15% depending on the actual ratio of urine to water processed.

### *5.2.3 Emergency Water Sources*

There is a primary backup and secondary backup to meet the two-fault tolerance requirement.

Each townhouse has its own independent WRS. Only one WRS is actually needed to handle the water processing for the entire station. Therefore, in the event that the system on one townhouse fails, the system on the other townhouse can take over full-time. There is a plumbing system in place between Townhouse A, Townhouse B, Node 1 on the central axis, and the Crew Tank Package to facilitate this.

In the unlikely event that both systems fail, there is a 28-day supply of Contingency Water Containers (CWCs) available. These CWCs are modified so that they can be filled on earth and survive the forces of a

Fig 5.2.2. CWCs. *Image*: http://spaceflight.nasa.gov/living/factsheets/water2.html

[35] "Water Processor Assembly." Hamilton Sundstrand. 28 February 2006 <http://www.snds.com/ssi/ssi/Applications/SpaceHabitat/WPA.html>.

launch. They resemble duffel bags and weigh 40.8 kg each[36]. Because no water recycling is available in an emergency situation that would require this secondary backup, there are a total of 40 CWCs available.

### *5.2.4 Water System Maintenance*

The Water Processor Assembly is a multistage system that primarily uses filters to process water. Filters and other parts will be replaced periodically as follows:

Table 5.2.5. Maintenance Schedule for the WPA[37]

| | |
|---|---|
| Pump/Mostly Liquid Separator | 720 days |
| Mostly Liquid Separator Filter | 120 days |
| Particulate Filter | 40 days |
| Multifiltration Bed #1 | 66 days |
| Multifiltration Bed #2 | 66 days |
| Gas Separator | 360 days |
| Microbial Check Valve | 360 days |
| Ion Exchange | 60 days |

Old filters will be discarded.

## 5.3 Personal Hygiene (Alessandra)

Hygiene is necessary on a space station to maintain the psychological health of the crew. Proper grooming is necessary for a good self image, high morale, increased productivity, and to cut down on objectionable odors. It also cuts down on the harmful bacteria which can become a health risk to the crew. A hygienic facility will be provided in each Node 3 on the station, making a total of three hygienic facilities on the station. It is the same hygienic facility that will be located in the Node 3 on the ISS. One hygienic facility will already be located on the Node 3 which is coming from the ISS and the other two hygienic facilities must be manufactured and placed in the Node 3's which are also being manufactured.

Each crew member will be provided with a "Comfort" hygienic set which will contain personal hygienic supplies such as razors, combs, a mirror, etc. A small amount of consumable hygienic supplies (eg. shampoo, soap, etc.) will be kept in the hygienic

[36] "Water on the Space Station." NASA Human Space Flight. 07 April 2002. NASA. 24 February 2006 <http://spaceflight.nasa.gov/living/factsheets/water2.html>.
[37] ISS Water Reclamation System Design. 1999-01-1950. Hamilton Standard Space Systems International, Inc. 17 April 2006.

facility and the rest will be stored until needed. The consumable supplies that will be used on the SSP were developed to be used with a minimal amount of water to cut down on usage. The amount of hygienic consumables required for each stay on the SSP – 0.0015 $m^3$/person/day, 0.075 kg/person/day[38] – depends on the number of crew members on the station and length of their stay.

It has been found that people will not practice good personal hygiene if the facilities are awkward, uncomfortable, or take an excessive amount of time to use.[39] It has also been found in previous attempts at creating traditional style showers for space that they embody all of these negative characteristics. Because of this, it was decided that wet towels will be used for full body washing on the station instead of a traditional type shower. This method of washing is preferred by most astronauts in microgravity and it will also cut down on the water usage on the station.

## 5.4 Waste Management (Alessandra)

On any station which will be occupied by humans for any sort of extended period of time waste becomes an issue. To provide waste management, the Hamilton Sundstrand WCS will be utilized. A WCS will already be located on the ISS in the Node 3. Two more WCS's will have to be manufactured to be launched with the two Node 3's that will also be manufactured. The WCS was decided on to be used for waste management on the SSP for a number of reasons. It functions normally in all gravity levels from 0-1g.[40] Since it was designed for module in which it will be located, there will be no integration problems. The system was based off of the Space Shuttle WCS but it was developed making a number of improvements making it more efficient and more comfortable for the astronauts who will utilize it.

The WCS has three separate assemblies: urinal, commode, and vacuum. Each crew member has their own funnel to use with the urinal subassembly which leads into the Urine Processing Assembly to extract the water out of the urine for recycling. The vacuum subassembly is utilized during the use of the urinal and commode subassemblies and provides airflow to compensate for reduced gravity. The commode subassembly compacts and stores feces. No additional processing of the fecal matter will occur. There is space in the fecal canister for at least 20 waste collections including all tissues and wipes. After the canister is full, it is changed and stored with the non-recoverable cargo on the station. The fecal canister contains collection bags which are made of a hydrophobic membrane. This allows for water vapor to escape while retaining liquid

---

[38] Stilwell, D., Boutros, R., and J. Connolly. Human Spaceflight Mission Analysis and Design. New York: McGraw Hill Companies, 1999.
[39] National Aeronautics and Space Administration. Man-System Integration Standards. Revision B. Huston: July 1995.

[40] Genovese, Joseph E. "Re: Space Habitats: Waste Collection System." Email to Amanda Alessandra. 17 March 2006.

waste.[41] Before the water vapor enters the cabin it passes through an odor/bacterial filter. Once it enters the cabin it can then be captured by the atmospheric regulation system.

One WCS will be located in each Node 3, making a total of three WCS's on the station. In case of failure of the WCS's, a 28-day supply of waste contingency bags will be stored on the station. This supply will last for the maximum amount of time it will take for a rescue mission to come to the station. This supply takes up 0.13m$^3$ and has a mass of 39kg.[42]

Table 5.4.1: WCS Specifications43

| | |
|---|---|
| Power: Urine and Feces Collection | 340-375 Watts |
| Power: Feces Compaction/Processing | 250 Watts |
| Pressure | ambient |
| Dimensions | 0.69m x 0.69m x 1.17m |
| Volume | 0.557 m3 |
| Mass | 111.5 kg |

## 5.5 Station Sanitation (Ling)

From previous space missions, it is known that bacteria and fungi are a problem in an enclosed partial gravity spacecraft environment. To combat this problem, the International Space Station has procedures in place to maintain a clean environment. Sanitation procedures on Space Station Phoenix mirror those on the International Space Station. Before they even go into space, crew members are tested for infections. The selection of materials for station construction is also considered. For example, the water pipes are made out of titanium to resist microbes. High traffic areas on the station, such as the food preparation, dining, waste management compartments, and sleeping areas are cleaned and disinfected on a regular basis. In fact, work areas and living quarters are cleaned and disinfected every day. Wipes containing antiseptic solutions make up the bulk of the cleaning supplies[44]. They have a total mass of 1,970 kg and occupy a volume of 13.1 m$^3$. Other cleaning supplies available to the crew are biocidal cleansers, disposable gloves, and vacuum cleaners. The biocidal cleanser is a detergent. The disposable gloves are used in conjunction with the biocidal cleanser for cleaning the waste collection system, dining area, floors and walls after spills[45]. These miscellaneous

[41] Goldblatt, Loel, Mark Neumann. International Space Station Waste Collector Subsystem Risk Mitigation Experiment Design Improvements. Hamilton Sundstrand Space Systems International, Inc. 2002.
[42] Stilwell, D., Boutros, R., and J. Connolly. Human Spaceflight Mission Analysis and Design. New York: McGraw Hill Companies, 1999.
[43] Waste Collector Subsystem. 2003. Hamilton Sundstrand. 15 February 2006. < http://www.snds.com/ssi/ssi/Applications/SpaceHabitat/WCS.html>.

[44] "Tiny Stowaways on Space Station." NASA Liftoff to Space Exploration. 09 January 2001. NASA. 24 February 2006 <http://liftoff.msfc.nasa.gov/News/2001/News-stationmicrobes.asp>.
[45] "Housekeeping in Space." NASAexplores. 4 May 2001. NASA. 20 February 2006 <http://nasaexplores.nasa.gov/show2_5_8a.php?id=01-034&gl=58>.

supplies have a mass of 274 kg and a volume of 1.97 $m^3$. The mass of the vacuum cleaners (1 primary, 2 spares) is 13 kg and they take up 0.07 $m^3$ of volume[46].

## 5.6 Trash Collection (Ling)

Trash collection on Space Station Phoenix also mirrors the International Space Station. A trash collection system is important because many things are disposable on the station. Disposable items help reduce cleaning water, which would otherwise need to be launched from earth. Some of the only things that are cleaned and re-used on a regular basis are utensils and food trays. Dirty clothes, food containers, and other trash is separated into two categories, wet and dry, then compacted and stored in airtight plastic bags. Wet items are defined as items that can give off unpleasant smells. Bags containing wet items are connected to a venting hose. Vacuum cleaners, which are also used to clean the station, have another role in trash collection. They are used to help "pick" things up. These vacuum cleaners have an extendable hose, several attachments, and a muffler to reduce noise output[47.] The mass of the trash compactor is 150 kg and it takes up 0.3 m3 of volume. The trash bags are 329 kg and take up 6.57 m3 of volume[48].

## 5.7 Acoustic Environment (Alvarado)

Noise pollution will be controlled to within NASA standards. This is extremely important as to make sure that noise levels do not cause irritation, sleep depravation, or disturb crew verbal communication[1]. The Noise Criteria (NC) for the US modules are NC50, about 55 dB, as the upper limit for a work environment and in sleeping areas NC40, about 45 dB, is the limit[8]. The Russian modules are designed to the maximum limit of NC55, about 65 dB, the crew will not be occupying most of these modules for long periods of time and systems may be stripped and replaced with ones that are up to code. High frequency noise is most common so the sleeping quarters will have to be kept free of fan-cooled systems besides personal computers. Sound-proofing may be required in some of the modules after modifications have been made to the systems. Each of the crew quarters and Donatello has an entry hatch that may be closed to stop sound from propagating throughout the station.

## 5.8 Cabin Atmosphere Selection (Alvarado)

### *5.8.1 Station Atmosphere Selection*

Another level one requirements for SSP is that it shall have a variable atmosphere from 8.3 psi to 14.7 psi. This means that it can operate at any pressure within those bounds

---

[46] Larson, Wiley J, and Linda K. Pranke. Human Spaceflight: Mission Analysis and Design. New York: McGraw Hill Companies, 1999.
[47] "Life in Zero-G." NASA Aerospace Scholars. NASA. 28 February 2006 <http://aerospacescholars.jsc.nasa.gov/HAS/cirr/ss/3/4.cfm>.
[48] Larson, Wiley J, and Linda K. Pranke. Human Spaceflight: Mission Analysis and Design. New York: McGraw Hill Companies, 1999.

and that pressure is decided by the mission parameters and the needed variables for the experiments that the scientists will be conducting. Below is a list of the composition of the atmosphere at the standard sea level pressure, for use whenever SSP will be operating at 14.7 psi.

Standard Sea Level Atmosphere
Total Pressure = 14.7 psi
Oxygen partial pressure = 3.1 psi
Nitrogen partial pressure = 11.4 psi
Water vapor partial pressure = 0.2 psi
Carbon dioxide partial pressure < 0.006 psi

### *5.8.2 $O_2/N_2$ Partial Pressure Band for Operation*

In order for the crew on SSP to function properly at the various total pressures, the oxygen pressure must be controlled. Figure 5.8.1 illustrates how the oxygen partial pressure relates to different operating atmospheric pressures[1]. On this figure the dark gray areas show where the oxygen percentage is located in an impaired performance zone, signaling the on set of hypoxia or hyperoxia. Hypoxia is caused by the lack of oxygen pressure in the lungs and is fatal after an extended period of time[1]. Hyperoxia is caused by higher than normal oxygen pressures making oxygen become toxic to the body causing severe central nervous system damage, at high pressures above 44.1 psi, and death after long periods of exposure[1]. It is extremely important that SSP stays within the bounds of the light gray as it will keep the astronauts in the most comfortable environment to work in as possible.

Figure 5.8.1: Absolute Total Pressure versus Oxygen Percentage

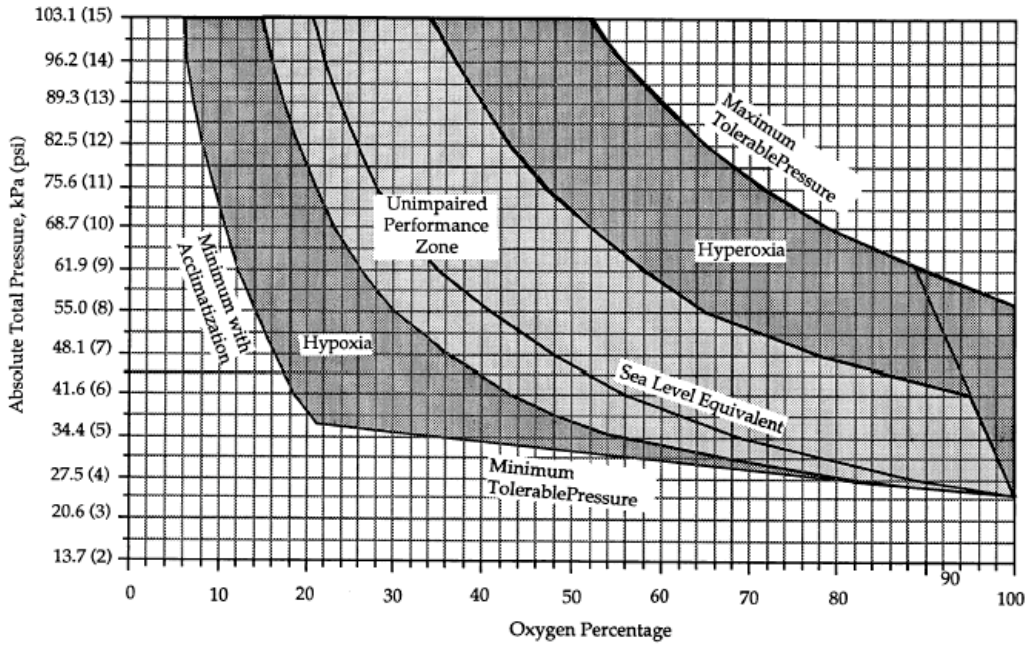


Source: *Internal Atmospheric Pressure and Composition for Planet Surface Habitats and Extravehicular Mobility Units.*

### *5.8.3 Calculation of the Mass of $O_2/N_2$*

Using the shell volume calculations of the modules, provided by structures, and an estimate of the inflatable volume that connects the two townhouse segments the total station volume is estimated to be about 2000 m³. Figures 5.8.2 and 5.8.3 are based on this total volume estimate. The amount of oxygen and nitrogen in the station should be about 580 kg and 1900 kg respectively when SSP is pressured to 14.7 psi.

Figure 5.8.2: Mass of Oxygen versus Temperature (Pressurized at 14.7 psi)

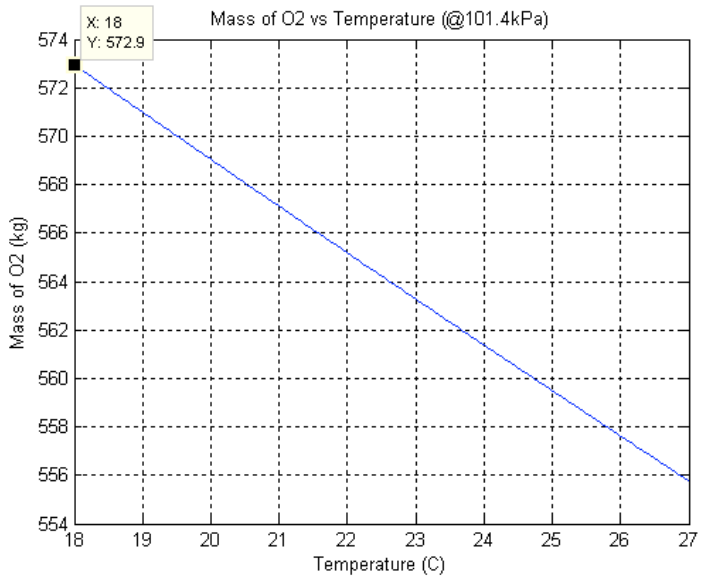


Figure 5.8.3: Mass of Nitrogen versus Temperature (Pressurized at 14.7 psi)

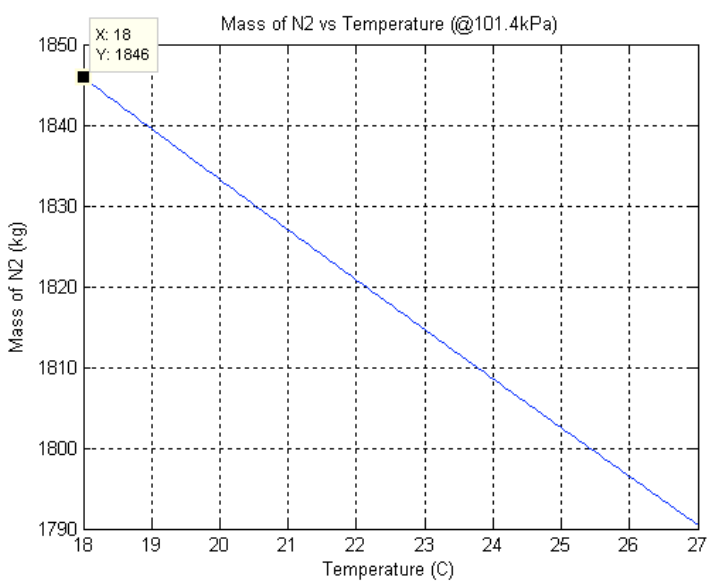


Figures 5.8.2 and 5.8.3 were generated, in Matlab, by applying the ideal gas law. The mass of the atmosphere for various pressures and temperatures was used for oxygen and nitrogen tank sizing equations. Keeping the oxygen partial pressure the same as it is at

sea level, although analysis was done at 8.3 psi the 14.7 psi, is the case that has the maximum oxygen and nitrogen needed for the station.

### *5.8.4 Temperature and Humidity Operating Zones*

The temperature of SSP will be controlled within a range of 18 °C – 27 °C[1]. This lets the astronauts be at reasonable temperatures, although a study done by NASA states that astronauts found the most comfortable temperature range to be 22 °C – 24 °C[1]. The relative humidity bounds are as follows between 25% - 75% relative humidity[1]. Figure 4 forms the "comfort box" and shows the operating temperatures and relative humidity bounds that form it.

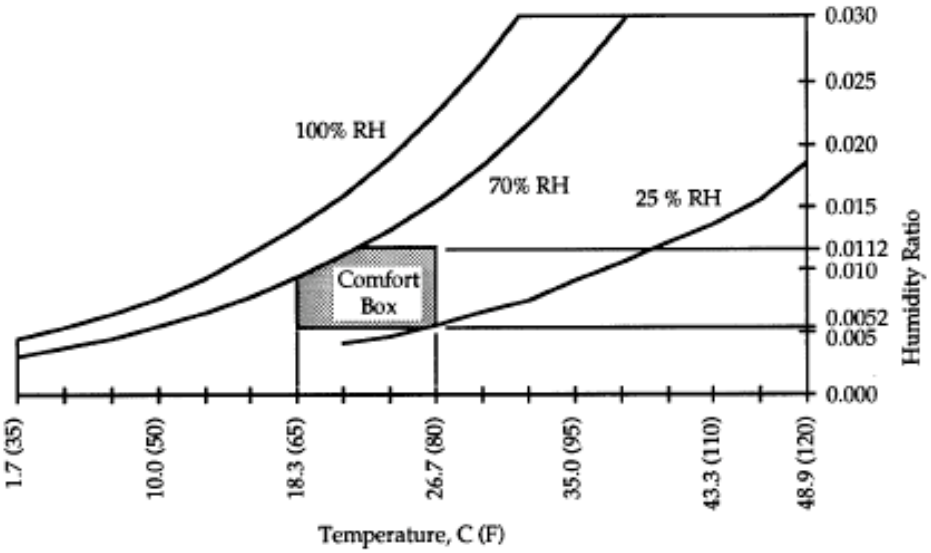


Figure 5.8.4: Humidity Ratio versus Temperature

Source: *Internal Atmospheric Pressure and Composition for Planet Surface Habitats and Extravehicular Mobility Units.*

## 5.9 Atmospheric Life Support System (Chandra)

To provide the six crew members of SSP with a habitable and comfortable environment, an atmospheric life support system must be properly designed. Since the SSP is created from parts of the ISS, certain infrastructures built for establishing and maintaining life support are already built into the existing modules such as inter-module ventilation (IMV) and fluid distribution systems.

Based on established SSP cabin sizing parameters and human requirements, basic atmospheric cabin parameters for are established (Table 5.9.1)[49].

[49] Eckart, Peter. Spaceflight Life Support and Biospherics. 2. Torrance, CA: Utz; Microcosm Press; Kulwer, 1994.

Table 5.9.1: Basic Cabin Atmospheric Parameters of SSP

| | |
|---|---|
| **Major Atm. Composition** | 79% Nitrogen, 21% Oxygen |
| **Cabin Pressure** | 8.3 to 14.7 psi |
| **Temperature Range** | 18.0ºC to 24.0ºC |
| **Relative Humidity** | 25% to 70% |
| **Airborne Particulates** | $3.5 \times 10^6$ max counts/m3 |
| **Ventilation** | 0.07 m/s to 0.20 m/s |

Table 5.9.1 is also reflective of the operating conditions aboard the International Space Station with the exception of the cabin pressure range. The Level 1 mission requirements require that the station be able to operate at a pressure of 8.3 psi which is accommodated structurally by the ISS modules that were designed to operate at the nominal Earth sea level pressure of 14.7 psi.[50]

The goal of the design of the atmospheric life support system aboard SSP is to utilize as many existing life support subsystems from the ISS, make those on the ISS more efficient, and to reduce the consumable mass required to operate the ALSS for the duration of construction, gravity simulations, and Mars simulation. The SSP ALSS design can be broken down into the following major sections:

1. Oxygen Supply/Generation
2. Nitrogen Supply/Generation
3. $CO_2$ Removal and Reduction
4. Air Revitalization
5. Oxygen Generation System (OGS) and Air Revitalization System (ARS) Racks
6. ALS System and Process Overview
7. Inter-Module Ventilation and Temperature/Humidity Control
8. Emergency Atmospheric Life Support Provisions

### *5.9.1 Oxygen Supply/Generation*

Oxygen ($O_2$) is a crucial metabolic element consumed by the crew, as well a necessity to pressurize the cabin atmosphere. Table 5.9.2. displays the consumption of $O_2$ on SSP. The SSP cabin suffers from daily leakage of 0.5% of the 2000 $m^3$ cabin atmosphere, and together with the other consumption sources, 8.97 kg of $O_2$ is required to be replenished daily.

Table 5.9.2: SSP Daily $O_2$ Consumption [kg $O_2$/per day][49,50]

| | |
|---|---|
| Metabolic Crew $O_2$ Req. | 0.85 (x6) |
| Experiments | 0.12 |
| Lab Mice (72) | 1.08 |
| Cabin Leakage | 2.67 |
| **TOTAL** | **8.97** |

To store $O_2$ for replenishment on SSP, many candidate sources were initially examined:

[50] NASA/TM-1998-206956. Wieland, P. O. Living Together in Space: The Design and Operation of the Life Support Systems on the International Space Station. NASA Marshall Space Flight Center, Huntsville AL: NASA, 1998.

### 5.9.1.1 Non-Regenerable $O_2$ Sources

Gaseous and cryogenic liquid $O_2$ sources were examined in a trade study, and were determined to have a far too large mass for a 3 year SSP mars mission without re-supply (Table 5.9.3). The main issue for gaseous $O_2$ storage was the high tank mass penalty required for high pressure storage. The main issue for liquid $O_2$ storage was the mass compensation for daily cryogenic boil off within the tank of 0.5% per day.

Table 5.9.3: Gaseous and Cryogenic O2 Storage Options for a 3 Year Mission [51,49]

| Storage Source | TRL | Tank Penalty ($kg/kg\ O_2$) | Yield $kg\ O_2/kg$ | 3 Year Mission Mass (kg)* |
|---|---|---|---|---|
| **Cryogenic (1)** | 9 | 0.7 | 1.00 | 29,900 |
| **Gaseous** | 9 | 2.0 | 1.00 | 52,600 |

*Includes:

- tank mass
- 0.5% leakage loss per day
- 1.15 safety factor and 28 day emergency supply

**(1)** Includes cryogenic boil off of 0.5% a day

Another trade study determining the effectiveness of chemical compounds that disassociate into $O_2$ as a source showed too much mass for a 3 year mission, much worse than gaseous or cryogenic sources (Figure 5.9.1):

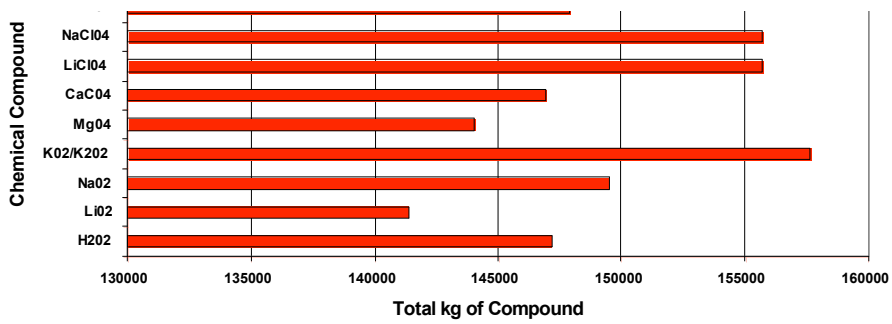


Figure 5.9.1: O2 Chemical Compound Masses for a 3 Year Mission. Includes packaging, cabin leakage, 1.15 safety factor, and 28 day emergency supply.[51,49]

### 5.9.1.2 Regenerable $O_2$ Sources

The large masses associated with providing a non-regenerable source of $O_2$ would cripple the SSP budget due to launch costs. There are regenerable options for generating $O_2$ that would be used in conjunction with $CO_2$ reduction to close the life support loop. Some candidate technologies are listed in Table 5.9.4.

[51] Akin. D.L. ENAE 483 Class Notes. 2005-2006

| | TRL | SubSystem | SubSystem | Power | Heat | On ISS ? |
|---|---|---|---|---|---|---|
| | Apr-05 | Mass (kg) | Vol (m^3) | (kW) | (kW) | |
| Regenerable $O_2$ Sources | | | | | | |
| Static Feed Water Electrolysis (SFWE) | 4 | 54 | 0.03 | 0.96 | ? | No |
| Solid Polymer Water Electrolysis (SPWE) | 9 | 64 | 0.05 | 0.32 | ? | Yes |
| Water Vapor Electrolysis | 4 | ? | ? | ? | ? | No |
| CO2 Electrolysis | 4 | ? | ? | ? | ? | No |

Table 5.9.4: Regenerable $O_2$ Systems [54]

Solid Polymer Water Electrolysis (SPWE) is the system used on the ISS Oxygen Generation System rack (Section 5.9.5). SPWE is recycled from ISS and utilized on SSP as the main $O_2$ generation source due to it's availability and technological maturity[49]. SPWE works on the following principal equation:

$$2H_2O + \text{Energy} \rightarrow 2H_2 + O_2$$

$H_2O$ is electrolyzed using a solid polymer electrolyte which is a solid thin plastic sheet of perfluorinated sulfonic acid polymer. When this sheet is saturated with $H_2O$, it becomes an ionic conductor, and a DC power supply is provided through the sheet from a cathode to electrode, with the $H_2$ and $O_2$ being separated and collected.[55]

In order to produce the 8.97 kg of $O_2$ per day, the existing SPWE system recycled for use on SSP will require 10.08 kg of $H_2O$ per day. The product $H_2$ is routed to the ARS rack (Section 5) and is used in $CO_2$ reduction subsystems to reclaim water from the atmosphere for re-use in the SPWE system.

### *5.9.2 Nitrogen Supply/Generation*

Nitrogen is an inert gas used to pressurize the SSP cabin and act as a fire retardant. Due to cabin leakage, $N_2$ is replenishment occurs continuously at a rate of 9.48 kg per day. The main source of $N_2$ on SSP is from the catalytic disassociation of hydrazine ($N_2H_4$) into $N_2$ and $H_2$. Both gaseous and cryogenic storage were considered in a trade study, however they proved the same problems that were encountered for $O_2$ storage (Table5.9.5), resulting in $N_2H_4$ yielding the lowest 3 year mission mass.

Table 5.9.5: Gaseous, Cryogenic, and Hydrazine N2 Storage Options for a 3 Year Mission [52,49]

| Storage Source | TRL | Tank Penalty (kg/kg N2) | Yield (kg N2/kg) | 3 Year Mission Mass (kg)* |
|---|---|---|---|---|
| **Cryogenic (1)** | 9 | 0.7 | 1 | 30,600 |
| **Gaseous** | 9 | 2 | 1 | 47,500 |
| **Hydrazine (N2H4)** | 3 | 0.2 | 0.88 | 19,700 |

*Includes:
tank mass
0.5% leakage loss per day
1.15 safety factor and 28 day emergency supply
**(1)** Includes cryogenic boil off of 0.5% a day

The process of disassociating $N_2H_4$ into $N_2$ and $H_2$ was a candidate technology for use aboard the International Space Station. Hydrazine is a stable liquid at room temperature with a density of 1.01 g/mL which is comparable to water, making it relatively easy to store.[49] It is also used as a common propellant for rocket engines and thrusters. The system used on SSP for the disassociation process was developed by scientists at the European Space Agency, and uses the following chemical process[53]:

$$3N_2H_4 \rightarrow 3N_2 + 6H_2 + \text{heat}$$

The disassociation occurs in a five stage process that involves a catalytic hydrazine decomposition reactor, a hydrogen separator to remove the $N_2$ from $H_2$ at 1007 K and 247 psia, and a catalytic oxidizer to remove any trace amounts of $H_2$ or $NH_3/N_2H_4$ from the $N_2$ stream. It is of paramount importance that the $N_2$ stream be pure of any other hydrazine products due to its extreme toxicity to humans in trace amounts. There are two independent 55 kg hydrazine reactor subsystems located on the crew tank package along the stability arm of the station. For every 1.00 kg of $N_2H_4$ disassociated by the reactor, 0.87 kg of $N_2$ is produced.

$N_2$ produced by the system is drawn to three destinations onboard SSP. Two streams are pumped using fans onboard the central Unity Node through 1.9" diameter titanium pipes within the inflatable transfer tube to each pressure control assembly (PCA) on both Townhouse A and B for introduction into the cabin atmosphere. A third stream of $N_2$ is pumped through the Unity Node 1 fluid system to the three outer 588 kg $N_2$ storage tanks on the US Airlock for emergency usage.

$H_2$ produced by the system is pumped through Node 1 using existing hazardous gas lines[50] and is channeled through separate insulated pipes through each inflatable transfer tube to other life support subsystems in Node 3 of Townhouse A and B (to be discussed in following sections).

[52]Akin. D.L. ENAE 483 Class Notes. 2005-2006

[53] Ayre, McCann.: Hypometabolic Stasis in Humans for Long Duration Space Flight. European Space Agency, Technical Report. 15 December 2004.

Based on the Space Station Phoenix 3 tier mission, the Table 5.9.6 details the amount of hydrazine required for nitrogen generation including a 28 day emergency supply and a 1.15 safety factor.

Table 5.9.6: Hydrazine Requirements for each SSP Mission Phase

| | **Construction** | **Gravity Test** | **Mars Simulation** |
|---|---|---|---|
| **Crew Members** | 3 | 6 | 6 |
| **Stay Duration** | 180 days | 300 days | 900 days |
| **ATMOSPHERE PRESSURIZATION $N_2H_4$ REQUIREMENT** | | | |
| **$N_2$ Leakage** | 1,950 kg | 3,250 kg | 9,750 kg |
| **28 Day Emergency** | 304 kg | 304 kg | 304 kg |
| **Safety Factor** | 1.15 | 1.15 | 1.15 |
| **TOTAL $N_2H_4$** | **2,591 kg** | **4,085 kg** | **11,560 kg** |

From the results above, the maximum amount of hydrazine required at any given phase is 11,560 kg corresponding to the Mars Simulation phase. This amount dictates the tank sizing of the Crew Tank Package located on the stability arm.

### *5.9.3 $CO_2$ Removal and $CO_2$ Reduction*

Carbon Dioxide ($CO_2$) is a human metabolic waste product of up to 1.00 kg of $CO_2$ per day per crew member. In addition, the experimental mice on board SSP produce 0.14 kg of $CO_2$ per day. In total, there is a production of 6.14 kg of $CO_2$ in the SSP cabin environment. $CO_2$ is toxic to human beings in an atmospheric partial pressure greater than 0.15 psi, and therefore is removed (scrubbed) from the SSP atmosphere and concentrated for use in generating $H_2O$ for the oxygen generation system.

When determining the methods for removing $CO_2$ from the SSP cabin, many different technology options were available (Table 5.9.7), the most attractive being systems that were regenerable and not consumables in order to sustain the 30 month Mars simulation. The 4 Bed Molecular Sieve subsystem that is already used on the ISS was extremely attractive, eliminating any development or launch costs.

Table 5.9.7: $CO_2$ Removal Technologies[49,54]

| | TRL 2005 | SubSystem Mass (kg) | SubSystem Vol (m3) | Power (kW) | Heat (kW) | On ISS ? |
|---|---|---|---|---|---|---|
| Regenerable CO2 Removal Systems | | | | | | |
| 2-Bed Molecular Sieve (2BMS) | 9 | 48 | 0.09 | 0.23 | ? | No |
| 4-Bed Molecular Sieve (4BMS) | 9 | 88 | 0.11 | 0.54 | ? | Yes |
| Solid Amine Water Desorption (SAWD) | 4 | 55 | 0.04 | 0.57 | ? | No |
| Electrochemical Depolarization Concentration | 4 | 42 | 0.06 | 0.04 | 0.34 | No |

The 2-Bed Molecular Sieve (2BMS) however, was chosen as the carbon dioxide removal system of choice for SSP. The 2BMS works by continuously utilizing a carbon molecular sieve to absorb $CO_2$ without absorbing moisture in the cabin atmosphere like a 4BMS zeolite molecular bed. Furthermore, 2BMS are able to scrub 95% of the $CO_2$ that passes through the system, as opposed to 66% scrubbed by the 4BMS. The 2BMS is easily adapted to the existing 4BMS setup on the Air Revitalization System (ARS) Rack (Section 5), and reduces the subsystem mass of the $CO_2$ removal system by 55%.[54] This reduction in mass is important, due to the fact that there is only one ARS rack on the ISS, and two are on SSP to meet two fault tolerance requirements. Combining the replacement 2BMS for the existing ARS rack with the mass saved by replacing the 2BMS on a newly launched ARS, the total exchange mass is almost negligible (8 kg). The 2BMS is also capable of processing all of the 6.14 kg of $CO_2$ produced daily, and the existing ISS ARS $CO_2$ removal setup is able to concentrate the $CO_2$ for use on a $CO_2$ reduction system.[55]

The $CO_2$ that is concentrated from the 2MBS can be vented, stored, or recycled for other life support systems on SSP. In order to maximize use of available resources to sustain living conditions, the $CO_2$ that is concentrated can be recycled and turned into water and deposited back into the life support system for oxygen generation or crew consumption. By reusing waste product $CO_2$, the design of the ALS system is being "closed", using in-situ resources to reduce the amount of consumables required to maintain the cabin atmosphere.

Many candidate technologies were available to use the $CO_2$ concentrated by the 2BMS system (Table 5.9.8):

[54] Anderson/NASA JSC, ALS Technologies List, 2005-04-13. Online. Excel Spreadsheet http://www.advlifesupport.jsc.nasa.gov/ documents/simadocs/ALS_Technologies_List.xls

[55] Carrasquillo. "Status of the Node 3 Regenerative ECLSS Water Recovery and Oxygen Generation Systems." SAE Technical Paper Series. 2004-01-2384

Table 5.9.8: $CO_2$ Reduction Technologies[49,54]

| | TRL Apr-05 | SubSystem Mass (kg) | SubSystem Vol (m3) | Power (kW) | Heat (kW) | On ISS ? |
|---|---|---|---|---|---|---|
| CO2 Reduction Systems | | | | | | |
| Bosch | 4 | 68 | 0.09 | 0.24 | 0.31 | No |
| Sabatier | 6 | 31 | 0.01 | 0.13 | 0.27 | July 2006 |
| Advanced Carbon-Formation Removal System | 4 | 108 | 0.3 | 0.3 | 0.15 | No |

The ISS utilizes a Sabatier reactor for $CO_2$ reduction, and maintains a lower system mass, volume, and power consumption basis than the other candidate technologies. Since it is an integrated ISS system on the Oxygen Generation System (OGS) rack (Section 5), it is recycled for use on SSP.

The overall chemical reaction of the Sabatier reactor is as follows:

$$CO_2 + 4H_2 \rightarrow CH_4 + 2H_2O + \text{Heat}$$

$CO_2$ is reacted with hydrogen drawn from both the disassociation of hydrazine, as well as product hydrogen from the SPWE system. The mixture is exposed to a ruthenium catalyst on a granular substrate at 450-800ºK producing gaseous methane and pure liquid water.[49] Hamilton Sundstrand, the producer of the Sabatier reactor on the ISS claims that the system has a 99% conversion rate of the concentrated $CO_2$ flow product. The methane product serves no purpose on board SSP, and is vented from each of the Townhouses where the OGS system is stored. The liquid water product is re-routed to the SPWE system for conversion into $O_2$ and $H_2$.

The combination of the 2BMS $CO_2$ removal system and the Sabatier $CO_2$ reduction leads to the following SSP ALSS operational figures:

**Daily SSP $CO_2$ Reduction : 6.14 kg/$CO_2$**
**Daily SSP $H_2O$ Sabatier Production : 4.88 kg/$H_2O$**

### *5.9.4 Air Revitalization*

In addition to $CO_2$ processing, the ALSS must be able to monitor the composition of the SSP cabin atmosphere as well at removing harmful trace contaminants. The ISS utilized a mass constituent analysis system (MCA) and a trace contaminant control system (TCCS) located on the ARS rack.[50] The ARS rack is recycled on SSP, and the MCA and TCCS components subsequently utilized.

### 5.9.4.1 Trace Contaminant Control System (TCCS)

The TCCS system component of the ALSS is designed to eliminate toxic atmosphere contamination such as airborne biological and chemical particulates. Sources of trace contaminants are metabolic gases from the crew, off-gassing of cabin plastics, insulation, adhesives, and paints, as well as system leakage. The TCCS system has a mass of 78 kg and a power consumption of 0.24 kW in a continuous operating mode.[50] The system consists of four levels of contaminant removal systems, and Table 5.9.9 lists the trace contaminants removed[50]:

Table 5.9.9: Trace Contaminants Removed

| | |
|---|---|
| •Acetaldehyde | •Indole |
| •Acrolein | •Mercury |
| •Ammonia | •Methane |
| •CO & $CO_2$ | •Methanol |
| •Dichloroethane | •Methyl ethyl keytone |
| •Ethoxyethanol | •Methyl hydrazine |
| •Formaldehyde | •Dichloromethane |
| •Freon | •Octamethyltrisiloxane |
| •Hydrogen | •Propanol |
| •Hydrazine | •Toluene |

1. Particulate Filter: *Removes aerosols and coarse particles.*
2. Charcoal Bed: *Removes contaminants with high molecular weights.*
3. Lithium Hydroxide (LiOH) Bed: *Removes nitrogen, sulfur, halogen, and metal* compounds.
4. Catalytic Oxidizer: *Removes contaminants not absorbed by the above methods.*

### 5.9.4.2 Mass Constituent Analysis (MCA)

The MCA system onboard the SSP consists of a mass spectrometer that measures the partial pressure of $O_2$ , $N_2$, and $H_2O$ within the cabin atmosphere to within 2% error. The system also measures harmful contaminants such as $H_2$, CO, $CO_2$, and $CH_4$ within the atmosphere and alerts the CWS in the event that any of the constituents are out of normal allowable concentrations. The system has a mass of 54 kg, and utilizes 0.10 kW of power.[50]

### *5.9.5 Oxygen Generation System and Air Revitalization System Racks*

On the ISS, the SPWE system and the Sabatier system are located on a standard international payload rack in Node 3 called the Oxygen Generation System (OGS). Next to the OGS rack on Node 3 is another standard payload rack called the Air Revitalization System (ARS); this unit contains the $CO_2$ removal assembly, the MCA, and the TCCS. Node 3 was designed by the European Space Agency as an environmental control and life support hub, in part to accommodate both water and ventilation to OGS and ARS.[56]

SSP specifically reuses the OGS and ARS pair on the ISS, and a new pair is launched so that an ALSS pair can be placed on Node 3 of each Townhouse. The justification for having a two pair system lies in the two fault tolerant nature of SSP systems. The pair on one Townhouse serves as the SSP primary ALSS, while the pair on the opposite is an idle ALSS auxiliary. Both racks and their components have been developed by Hamilton Sundstrand, and their specifications are in Tables 5.9.10 and 5.9.11, and Figures 5.9.2

[56] European Space Agency, "Node 3: The Connecting Module." ESA: International Space Station and Human Spaceflight. 19 Jul 2004. ESA. 13 May 2006 <http://www.esa.int/esaHS/ESAFQL0VMOC_iss_0.html>

and 5.9.3 below. It is important to note that in flight testing, all life support components were tested in full gravity conditions for technical evaluation.[55]

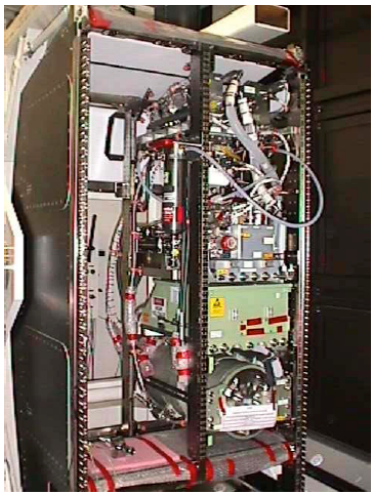

**Figure 5.9.2: OGS Rack**
Credit: Hamilton Sundstrand. http://www.hamiltonsundstrand.com/hsc/proddesc_display/0,4494,CLI1_DIV25_ETI5338_PRD786,00.html

Table 5.9.10: OGS Rack Components

| Component | Mass (kg) | Volume (m3) | Power (kW) |
|---|---|---|---|
| SPWE | 64 | 0.05 | 0.04 |
| Sabatier Reactor | 31 | 0.01 | 0.13 |
| Support Equipment | 616 | 1.54 | 2.983 |
| **TOTAL** | ***711*** | ***1.6*** | ***3.153*** |

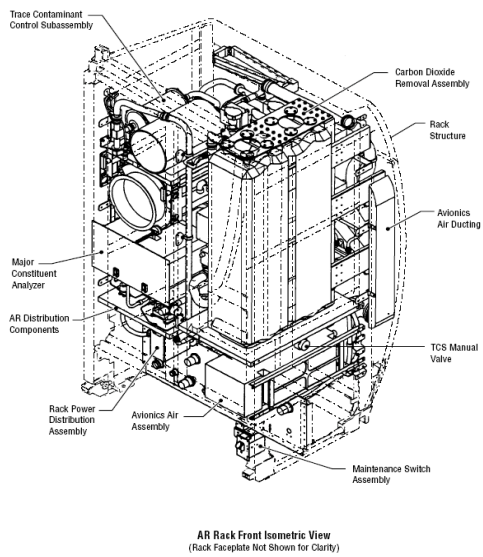


**Figure 5.9.3: ARS Rack**
Credit: ISS AR Rack", NASA/TM-1998-206956/VOL1

Table 5.9.11: ARS Rack Components

| Component | Mass (kg) | Volume (m3) | Power (kW) |
|---|---|---|---|
| 2BMS | 48 | 0.09 | 0.23 |
| MCA | 54 | - | 0.1 |
| TCCS | 78 | - | 0.24 |
| Support Equipment | 300 | - | 1.22 |
| **TOTAL** | ***480*** | ***1.6*** | ***1.79*** |

### *5.9.6 ALS System and Process Overview*

The interaction between the OGS and ARS on SSP occurs at the following rates:

**10.08 kg $H_2O$/day is used by SPWE in generating $O_2$**
**4.88 kg $H_2O$/day produced by the Sabatier system**

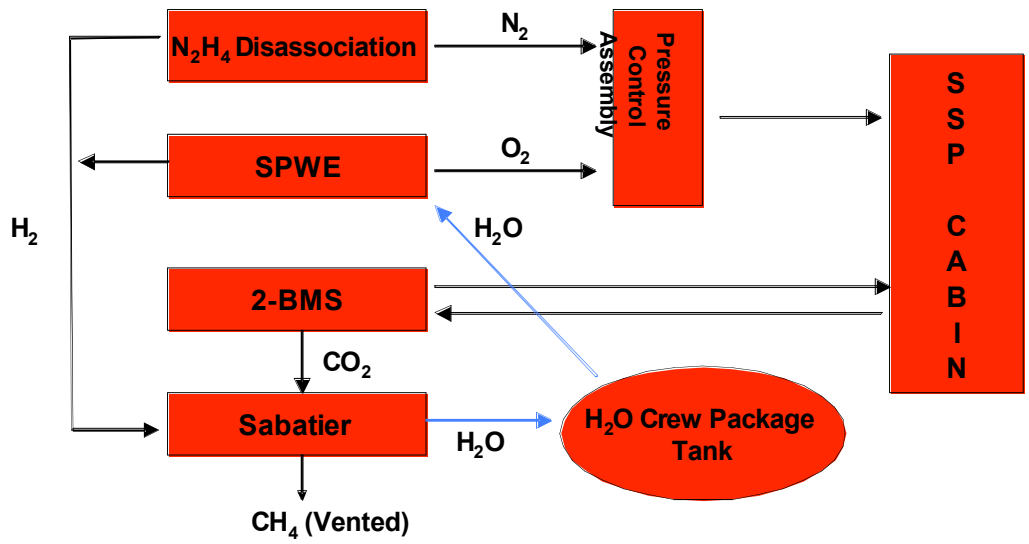


This imbalance means that 5.20 kg of $H_2O$ is lost daily through the SSP ALSS. Based on this negative trend, Table 5.9.12 outlines the needed amounts of $H_2O$ required for each SSP mission tier. The maximum amount of $H_2O$ required for the ALSS (including a 28 day emergency supply, and a 1.15 safety factor) is 5,706 kg; this determines the water tank sizing for $H_2O$ on the Crew Tank Package on the Stability Arm of the SSP.

**Table 5.9.12: $H_2O$ Requirement for SSP Mission Tiers**

| | Construction | Gravity Test | Mars Simulation |
|---|---|---|---|
| **Crew Members** | 3 | 6 | 6 |
| **Stay Duration** | 180 days | 300 | 900 |
| **ATMOSPHERE/OGS H20 REQUIREMENT** | | | |
| **OGS Requirement** | 670 kg | 1560 kg | 4680 kg |
| **28 Day Emergency** | 282 kg | 282 kg | 282 kg |
| **Safety Factor** | 1.15 | 1.15 | 1.15 |
| **TOTAL $H_2O$** | 1094 kg | 2118 kg | 5706 kg |

### *5.9.7 Inter-Module Ventilation and Temperature/Humidity Control*

SSP will be dealing with an atmosphere that exhibits different behaviors at different mission tiers and within physical station sections. During the full to partial gravity phases of the mission, the atmosphere on board SSP will experience natural air convection, causing air distribution flows to shift towards the ends of the Townhouses. During the zero gravity phases of the mission, no air convection will be present, therefore thermal gradients will develop and contaminants will build up in certain areas. The solution is a forced ventilation system to mimic convectional flows throughout the station. This allows the adequate distribution of fresh oxygen throughout SSP, as well as removal of contaminants and harmful $CO_2$. Since SSP modules are recycled from the ISS, SSP inherits a vast network of IMV and THC infrastructure. A generated flow of at least 0.08

m/s is required in order to move $CO_2$ throughout the cabin towards the ARS, and a maximum of 0.2 m/s is required to prevent drafts.[49,50]

The ISS inherited ventilation distribution system within SSP modules is of a rectangular cage structure, with ventilation airflow diffusing from the top and being drawn away through ducts in the lower portion (Figure 5.9.5). Ventilation through the 45 meter inflatable shirt sleeve transfer tubes is accomplished using a 40 cm diameter Protan Ventiflex Ventilation Tube (Model 7198), with vents passing airflow through the entire tube. The flame resistant and anti-static tubing in each inflatable weighs 55.35 kg (1.23 kg/m) and is designed for ventilating underground mines.[57]

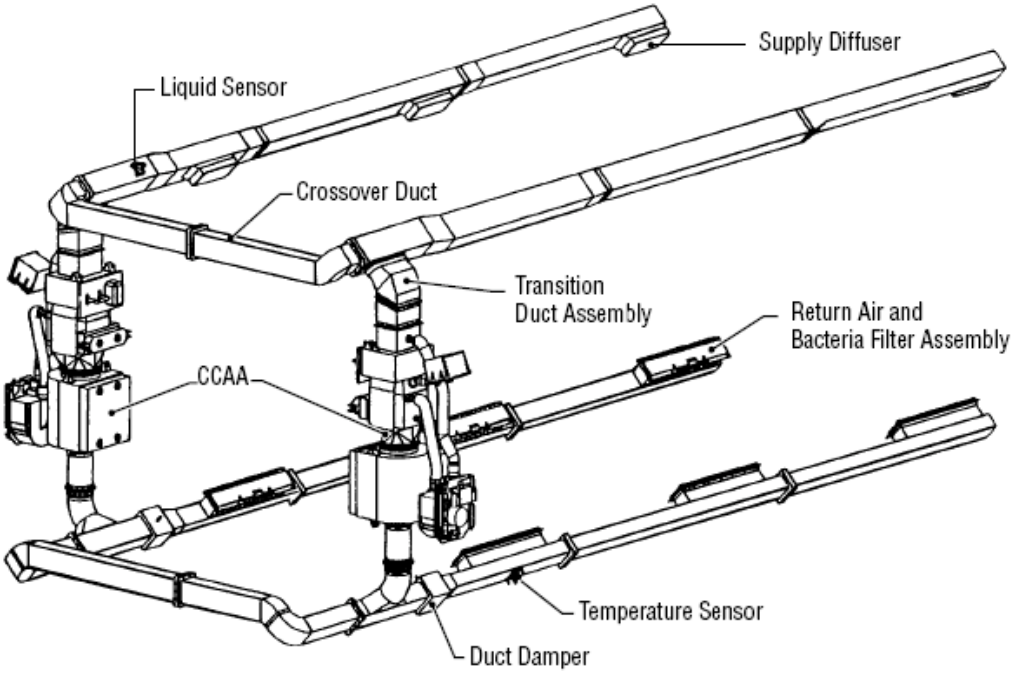


Figure 5.9.5: ISS/SSP IMV ducting setup.
Credit: NASA/TM-1998-206956/VOL1

[57] "Protan." Protan Ventilflex Ventilation Tubing. 2005. 13 May 2006 <http://www.protan.com/ventiflex/default.asp?Key=217&siteID=19&othermarkeds=21>.

### 5.9.7.1 Common Cabin Air Assembly (CCAA)

Forced ventilation, as well as THC is controlled in the SSP cabin using CCAA units (Figure XX, Table XX). Maintaining the cabin temperature is important for crew comfort and health, requiring heat removal from human metabolic production and electronic system production. Humidity is contained within SSP parameters (25-70 %) to avoid condensation on system components and basic crew comfort. The CCAA accomplishes the THC tasks using a condensing heat exchanger and a water gas separator that can remove 2.032 kW of cabin heat. It also has a fan unit to generate ventilation airflow at a maximum of 0.26 m/s. There are 12 CCAA units on SSP: 2 on Destiny module, 2 on Node 3 Townhouse A, 2 on Node 3 Townhouse B, 2 on the Russian Module (RM), and 2 spare units stored on JEM-PM. The CCAA units are produced by Hamilton Sundstrand.[58]

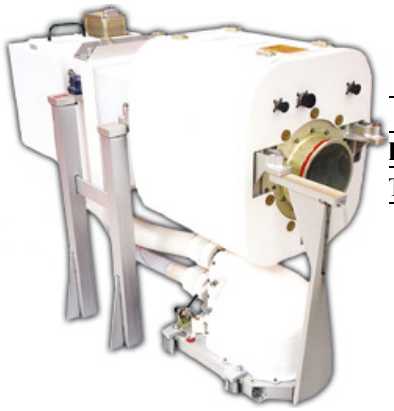

Figure 5.9.6: CCAA
Credit: http://www.snds.com/ssi/ssi/Applications/SpaceHabitat/CCAA.html

Table 5.9.13: CCAA Specifications

| | Mass | Volume | Power |
|---|---|---|---|
| **Each** | 112 kg | 0.4 $m^3$ | 0.45 kW |
| **Total (12)** | **1344 kg** | **4.8 m3** | **4.5 kW (10)** |

### 5.9.4.2 Inter-module Ventilation Fans

The majority of the forced airflow produced throughout SSP is generated using lightweight IMV fans within the ducting system (Figure XX, Table XX)[59]. Produced by Hamilton Sundstrand, an IMV fan is capable of generating an airflow of 0.2 m/s. There are 22 units throughout SSP: 2 on Donatello, 2 on Leonardo, 2 on Columbus, 2 on Node 2, 2 on Zvezda, 2 on Russian MLM, 2 through Inflatable A, 2 through Inflatable B, 2 on Raffaello, and 4 spares on JEM-PM.

Table 5.9.14: CCAA Specifications

| | Mass | Volume | Power |
|---|---|---|---|
| **Each** | 4.8 kg | 0.009 m3 | 0.06 kW |
| **Total (22)** | **105.6 kg** | **0.198 m3** | **1.08 kW (18)** |

Figure 5.9.7: IMV Fan
Credit: http://www.snds.com/ssi/ssi/Applications/SpaceHabitat/Vent Fan.html


### 5.9.4.3 HEPA Filters

[58] "Common Cabin Air Assem and Space and Planetary Habitat. 2003. United Technologies. 13 May 2006 <http://www.snds.com/ssi/ssi/Applications/SpaceHabitat/CCAA.html>.
[59] "Intermodule Ventilation Fan." Hamilton Sundstrand Space and Planetary Habitat. 2003. United Technologies. 13 May 2006 <http://www.snds.com/ssi/ssi/Applications/SpaceHabitat/Vent_Fan.html>.

On each IMV vent, there is a protective HEPA (High Efficiency Particulate Assembly) filter that screens out particle contaminants from the circulating atmosphere larger than 0.3 microns. There are 120 HEPA filters on board SSP, 30 of which are spares for clogged or dirty filters. Each filter weighs 2.14 kg, for a total of 256.80 kg. The filters are produced by Hamilton Sundstrand.[60]

[60] "HEPA Filter." Hamilton Sundstrand Space and Planetary Habitat. 2003. United Technologies. 13 May 2006 <http://www.snds.com/ssi/ssi/Applications/SpaceHabitat/HEPA_Filter.html >.

# VI. Station Systems

## 6.1 Power Budget (Fields)

| | |
|---|---|
| Everyday Needs | 78 kW |
| Charging Batteries (40% of each orbit) | 130 kW |
| Orbit Maintenance & Attitude Control | 40 kW |
| Spin-Up | 80 kW |
| Maximum Power Needs at One Time | 288 kW |
| Solar Panel Production | 294 kW |

Table 6.1.1: Power Breakdown

Table 6.1.1 shows the breakdown of the power needs of SSP. Between all of the systems that will be running constantly every day, 78 kW will need to be allotted.

Because the orbit maintenance thrusters and the spin-up thrusters will never be used at the same time, they will be assigned to the same power allotment of 80 kW in order to minimize the size of the power sources (solar panels and batteries). Due to the orientation of SSP and its rotation around the Earth, the solar panels cannot be the sole supplier of power to the station; batteries must be used to power the station for 40% of every orbit. This means that while the solar panels are supplying power to the station, they must also charge that batteries. The power needed to charge the batteries is 130 kW. All of these needs sum together to get a maximum power need of 288 kW; the solar panels are over-sized to generate 294 kW.

## 6.2 Power Generation

### *6.2.1 Powering the Station (Lloyd)*

Powering Space Station Phoenix is done via two systems: solar panels and batteries. Since it is in Low Earth Orbit, the station will only be in sunlight for about 60% of each orbit. During this non-eclipse time, the solar panels will provide the main power to the station while also recharging the batteries. During the 40% of the orbit in which the station is in an eclipse, the batteries will power the station.

### *6.2.2 Power Breakdown (Lloyd*

The electric thrusters demand excessive power but are used infrequently at high power. Some options looked at for powering the electric thrusters were oversized batteries and oversized solar panels. Oversized batteries would be optimal if the thrusters were used for short periods, however, they run for hours at a time. Thus, too much energy is needed, and the batteries would be too massive. The chart below compares each method:

Table 6.2.1 Oversized Methods

| Method | Solar Panel Mass (kg) | Battery Mass (kg) | Total Mass (kg) |
|---|---|---|---|
| Oversized Solar Panels | 1275 | 3330 | 4605 |
| Oversized Batteries | 920 | 19780 | 20700 |

Oversized solar panels were the option chosen because they will be much more lightweight and, therefore, cost effective. The attitude control thrusters and the spin up thrusters will never be used simultaneously. Allowing both sets of thrusters to share the same power allotment saves 45 kW as compared to each system having a separate power allotment.

### *6.2.3 Solar Panels (Lloyd)*

The solar panels that have been chosen for SSP are the SLASR (Stretched Lens Array Squarerigger). The Stretched Lens Array is the solar blanket and is produced by Entech Inc. The Squarerigger is the solar array structure and is produced by ABLE Engineering Inc.[61]

Figure 6.2.1 SLASR Solar Panels


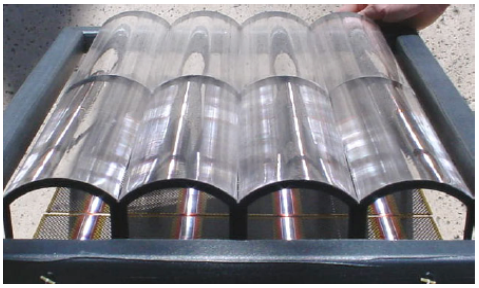

These solar panels were chosen because they are lightweight and produce more power per solar panel area than any other solar panels found. These solar panels also boast a very low stowage volume, which is optimal for our launch vehicle payload bays. The specs used in sizing these solar panels are based on near-term (2008) technology to ensure that they will be fully ready by the time SSP is launched. In the chart below you can see the near term and mid term specs of the solar panels. The mid term specs optimally will be ready by 2013, and if this occurs, the mass and solar panel area for SSP will be even lower than expected.

[61] "PROMISING RESULTS FROM THREE NASA SBIR." 2005. NASA. 01 Apr. 2006 <http://gltrs.grc.nasa.gov/reports/2005/CP-2005-213431/08Eskenazi.pdf>.

Table 6.2.2 SLASR Specifications

| | Near Term (2008) | Mid Term (2013) |
|---|---|---|
| Recurring Cost ($/W) | 250 | 125 |
| Specific Mass (W/kg) | 330 | 500 |
| Deployed Power Density ($W/m^2$) | 300 | 390 |
| Stowed Volume ($kW/m^3$) | 80 | 120 |

Re-using the ISS solar panels was looked at as an option to save launch costs. However, this was unfeasible because the solar panels will be well past their lifetime when SSP is constructed. Also, because of the high power demands of SSP, extra solar panels would need to be launched regardless. The ISS solar panels run on 1960's technology and the extra solar panels would weigh more then the lighter and more efficient SLASR panels. Assuming a 30% loss of efficiency over 10 years, which is typical for solar panels in LEO, the SLASR solar panels produce 0.21 $kW/m^2$ after 10 years. Using this EOL specification, along with the other BOL specifications show in the Table 6.2.2, the solar panel sizing was done using Power Systems Design notes from ENAE 483[62]. The sizing of the solar panels along with the power they produce can be found in Table 6.2.3 below.

Table 6.2.3 Solar Panel Sizing

| | |
|---|---|
| Power needed for station | 158 kW |
| Power needed to charge batteries | 130 kW |
| Total power the solar panels generate (EOL) | 294 kW |
| Mass of solar panels | 1,275 kg |
| Total area of solar panels | 1,400 $m^2$ |

### *6.2.4 Batteries (Lloyd)*

The batteries that have been chosen for SSP are the Ni-$H_2$ batteries in single pressure vessels. These batteries are produced EaglePicher Technologies LLC[63]., who also produce the batteries currently used on ISS. The batteries chosen can be seen below in Figure 6.2.2 The parameters used in sizing the batteries were that they would have a 90% efficiency at storing energy and producing power. They would also be allowed a 40% depth of discharge. The batteries would have to store enough energy to power the station with a 158 kW for 40% of the orbital period. Using this data and the battery specs the total battery mass on SSP is 3,330 kg.

[62] Akin, Dave. "Power Systems Design." University of Maryland. <http://spacecraft.ssl.umd.edu/academics/483F05/483L13.power/483L13.2005.html>.

[63] http://www.eaglepicher.com/EaglePicherInternet/Technologies/Power_Group/Space_Applications/Products_Services/." Eagle Picher. Eagle Picher Technologies LLC.

Figure 6.2.2 Ni-H2 Battery in SPV

### *6.2.5 Optimal Sun Alignment (Lloyd)*

The solar panel alignment must be adjusted for optimal sun exposure. With no adjustment, the solar panels face would be perpendicular to the sun in about 90 days because of the earth's rotation around the sun. The panels must be rotated 360 degrees per year, so the daily adjustment would be 0.99 degrees. This adjustment would be done once per day by a control system onboard SSP. It was opted that the adjustment be performed once per day rather than constantly because the constant adjustment to the motor speed would be too small, and believed to be beyond the velocity error of a motor. Below you can see a picture of the solar panel alignment with adjustment and without.

Figure 6.2.3 Solar Panel Alignment

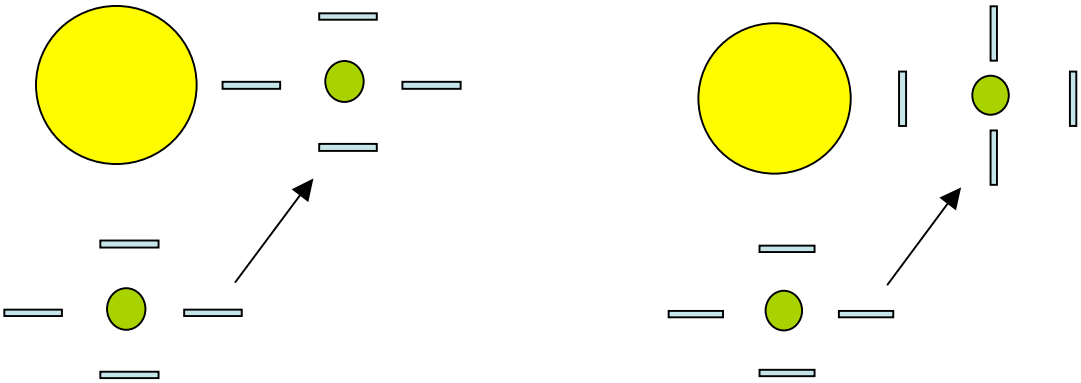

Without adjustment With adjustment

### *6.2.6 Solar Panel Placement (Fields)*

In order to get maximum sun exposure, the solar panels will be mounted on the non-rotating section of SSP. If the solar panels were to spin with the station constantly at a rate of 4.5 rpm, they would never get enough time in the sun's exposure to generate a sufficient amount of energy. In keeping them from rotating, the front of the panels will always face the sun.

As the Earth rotates around the Sun, the orientation of the station will remain the same; this causes the solar panels to need small adjustments throughout the year to keep them faced toward the sun. The panels will be adjusted every day by 0.99 degrees in order to maintain optimal sun exposure.

The total area of solar panels needed is 1,400 $m^2$; this area is split up into four sections of 350 $m^2$ each. They are placed as follows:

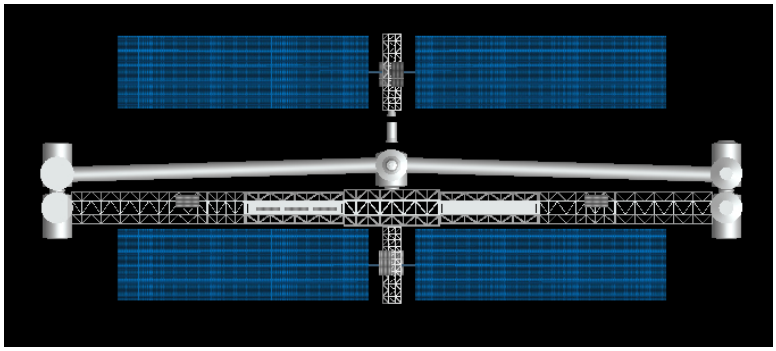

Figure 6.2.4: Solar Panel Placement

There are two panel sections on either end of the station attached to the non-rotating truss. Initially, the solar panels were going to be split into two sections and placed on one side of the truss. This initial design was replaced by the four section design in order to balance out the mass distribution and keep the center of gravity from shifting.

As stated above, each section needed to be 350$m^2$: 35m along the x-axis and 10m in the z-axis. Each section was not able to extend farther than the inflatable transfer tubes because the townhouse structures will be rotating and any possible collision would be detrimental. Each section also could not coincide with the main truss section, which determined the maximum height in the z direction. This was another main factor in determining the position of the solar panels.

### *6.2.7 Nuclear Power Trade Study (Pappafotis)*

When first attempting to build Space Station Phoenix, the most important concern in Power, Propulsion, and Thermal is how we were going to power the space station which we assumed to be a need of 300 kWe. Three methods were considered in this analysis: Nuclear power, solar power, and fuel cells. Fuel cells were dropped early on because not enough empirical evidence was available showing their feasibility in space applications for this project. This left solar and nuclear. To determine which one would be the best a trade study was conducted. An analysis was done on the feasibility of current and future nuclear reactors.

Table 6.2.4

Current Space Nuclear Reactors

| | SNAP-10A | SP-100 | Romashka | RORSAT | TOPAZ I | TOPAZ II |
|---|---|---|---|---|---|---|
| Tech. Stat. | 6 | 4 | 6 | 6 | 6 | 6 |
| Thermal (kWt) | 46 | 2000 | 40 | 100 | 150 | 100 |
| Power (kWte) | 0.65 | 100 | 0.8 | 2.5 | 7 | 6 |
| Convertor | Thermoelectric (TE) | TE | TE | TE | Thermionic (TI) | TI |
| Fuel | U-$ZrH_2$ | UN | $UC_2$ | UMo | $UO_2$ | $UO_2$ |
| Coolant | NaK | Li | None | NaK | NaK | NaK |
| $^{235}U$ (kg) | 4.5 | 140 | 49 | 25 | 12 | Var. |
| Reactor Mass (kg) | 435 | 5422 | 455 | 390 | 320 | 250 |
| Shield Mass (kg) | 50 | 2000 | 40 | 100 | 150 | 100 |
| Radiator Mass (kg) | 150 | 6000 | 120 | 300 | 450 | 300 |
| Structure (kg) | 25 | 1000 | 20 | 50 | 75 | 50 |
| Convertor (kg) | 71 | 11000 | 88 | 550 | 1100 | 750 |
| Cost (US $) | N/A | Canceled (~2 billion development cost, 100 million first unit) | N/A | N/A | 20 million | 20 million |

Table 6.2.5

| Current Nuclear Reactors Cost Analysis | | | | | | |
|---|---|---|---|---|---|---|
| | SNAP-10A | SP-100 | Romashka | RORSAT | TOPAZ I | TOPAZ II |
| kg/kWte | 1131.538 | 255.62 | 965 | 566 | 301 | 241.6667 |
| 300 kWe (kg) | 339461.5 | 76686 | 289500 | 169800 | 90300 | 72500 |

The nuclear reactors that have already been developed for space are not feasible for the power requirements of SSP, the TOPAZ II is the smallest reactor however the amount of mass it would take up is not feasible within the constraints of the project. To launch this mass would be in the tens of billions of dollars, and would exceed the budget for our entire project in launch cost alone.

Knowing that current nuclear reactors would not do the job, the next step was to look into future technology to determine if any current project would fit our power needs by 2017. The International Space Technology Forum was indispensable in finding this information. References are included at the end for specific articles that contributed to the following table of future nuclear reactors:

Table 6.2.6

| Space Nuclear Reactors Projected for SSP | | | | | | |
|---|---|---|---|---|---|---|
| | | | | | | |
| | HOMER-15 | SAFE-30 | SAFE-100 | SAFE-300 | SAFE-400 | SAFE-500 |
| | | | | | | |
| Tech. Stat. | 5 | 5 | 4 | 4 | 4 | 4 |
| Thermal (kWt) | 15 | 30 | 100 | 300 | 400 | 500 |
| Power (kWte) | 3.75 | 7.5 | 25 | 75 | 100 | 125 |
| Convertor | Brayton | Brayton | Brayton | Brayton | Brayton | Brayton |
| Fuel | UN | UN | UN | UN | UN | UN |
| Coolant | Na | Na | Na | Na | Na | Na |
| Fuel (kg) | 4.5 | 8 | 30 | 105 | 140 | 180 |
| Reactor Mass (kg) | 214 | 300 | 350 | 406 | 541 | 560 |
| Shield Mass (kg) | 20 | 50 | 140 | 350 | 470 | 583 |
| Radiator Mass (kg) | 75 | 175 | 520 | 780 | 1040 | 1296 |
| Structure (kg) | 25 | 40 | 110 | 160 | 212 | 266 |
| Convertor (kg) | 70 | 150 | 500 | 1425 | 1900 | 2350 |
| Cost (US $) | ? | ? | ? | ? | 30 million | 30 million |

Table 6.2.7

| Space Nuclear Reactors Projected for SSP Cost Analysis | | | | | | |
|---|---|---|---|---|---|---|
| | HOMER-15 | SAFE-30 | SAFE-100 | SAFE-300 | SAFE-300 | SAFE-500 |
| kg/kWte | 108.93333 | 96.4 | 66 | 43.01333 | 43.03 | 41.88 |
| To Reach SSP | | | | | | |
| Power Requirements | | | | | | |
| 300 kWe (kg) | 32680 | 28920 | 19800 | 12904 | 12909 | 12564 |

With the reactor technology in development currently we see an ability to power SSP using nuclear power in the SAFE series of cores. The SAFE 300 or 500 series could be

used to power the SSP at a reasonable cost. 12,564 kilograms is a reasonable amount of money to spend on a power system for a nuclear reactor. However, given the fact that SSP will be in Earth orbit, environmental concerns are paramount. In order to determine if the above nuclear reactors would be feasible in our space station we would have to take into account the cost of an environmental impact study on the launch and operation of said reactor.

The environmental impact study involves the analysis of the environmental effects of launch, failed launch, operation, failure during operation, and deorbit of the nuclear reactor over the course of the entire mission. This study involves all facets of science including, physics, meteorology, climatology, space systems, chemistry, nuclear chemistry, engineering, etc. It is difficult to gauge how much this would cost, perhaps in the tens of billions of dollars. In addition, there is no way to even guess the interference of environmental organizations in the launch of said reactor. Legislation in this arena could take years and cost millions, even delaying the mission for an indefinite period. This is unacceptable, so ultimately, nuclear reactors were dropped as an option given this fact, and the fact that the solar panels we discovered were cheaper than the launch tag of the nuclear reactor disregarding environmental impact concerns.

## 6.3 Power Management and Distribution - PMAD (Pappafotis)

One of the primary concerns of the PPT group is delivering power to the various sections of Space Station Phoenix. This is done through an extensive network of wiring, switching units, shunts, regulators, batteries, converters, and fuses. What follows is a top level technical over view of the **system** that will perform this function on SSP.

Before the PMAD system can be explained it is important to understand some basic principles of space power systems. These are as follows:

**- PCU:** The Power Control Unit is arguably the most important part of a power system. It is the computer hardware and software that runs the power system. It is located in the Unity node rack and is directly connected to all switching units on the entire station including the battery charge and discharge units. In this way, the power control program can direct power through out the station as needed. It can also be overridden and run manually if necessary.

**- Switching Units:** Switching units control the flow of power with physical on and off switches. They contain fuses that will blow if too much current runs through the system, if not, major damage could occur to electrical components. Also located in switching units are shunts that can dump excess power from the system when needed in the case that too much is released into the system and is not needed.

**- Battery Charge and Discharge Units:** These control whether power is flowing in and out of the battery and therefore into and out of the grid as needed. Each of the batteries has one.

**- Converter Units:** Converter units change one form of power to another. They are important when stepping up and down voltages or in modulating current to match certain types of load specifications.

**- Loads:** The end user of the power such as a computer or a life support system.

**- Grounding:** All electrical systems must be grounded. In space there is no ground so this is done differently than on Earth, instead of a definite ground, all conducting surfaces must be connected to each other. This is necessary because the PV arrays and the Hall thrusters charge the part of the station they are on to a certain voltage which can lead to dangerous arcing between parts of the station at different potentials. The entire station must be at the same potential. However, this also means that it will be at a potential different from an incoming space craft wishing to dock with the station. This will be overcome by a system of brushes that will dissipate the potential difference safely before the space craft docks.

Now that the basic principles have been explained the next step is to understand the flow of the system and certain acronyms that will come in handy in describing it. The following flow chart is a depiction of how power will flow on SSP.

Figure 6.3.1

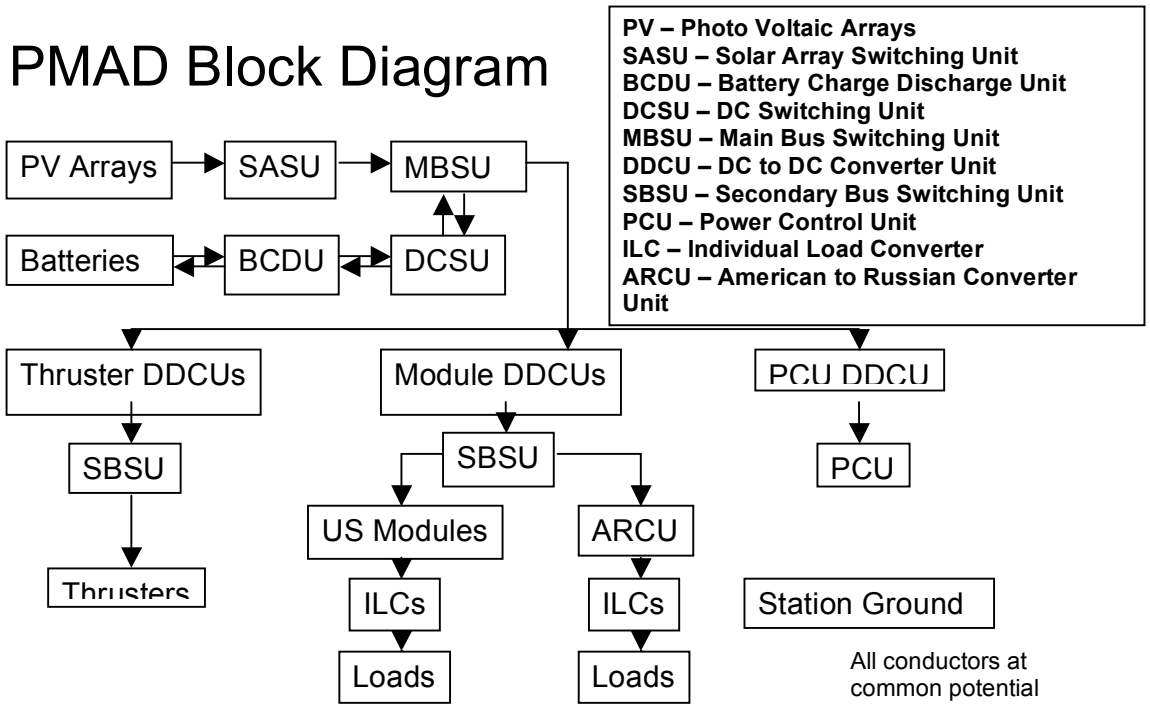


Starting at the beginning, where the power is generated, the pieces of the PMAD system will be described in detail.

The photovoltaic arrays are the beginning of the system. They collect energy from the sun and transform it into electrical power. The SASU controls which solar arrays are active and which are off. From there the power goes to the MBSU which has many functions. One is to redirect power to and from the batteries depending on if it is day or night. During the day, power flows to the batteries in addition to the rest of the station. At night, power flows from the batteries into the grid to power the station. The BCDU physically charges and discharges the batteries and the DCSU controls which batteries are on and which are off. This section is called the Primary Bus of the electrical system.

From the MBSU the power runs into three different sections of the PMAD system. The first is the PCU, which is a unique section of the system because it directly controls the rest of the power system. A DDCU is used to control current and adjust voltages for delivery to the PCU. The second section are the individual module DDCUs. Each townhouse on the station will have its own DDCU which will convert the 180 volt power from the solar arrays into the 120 volt power for use inside the modules. From there each townhouse has an SBSU to control power to different circuits in that series of modules, namely the individual modules themselves. From there power is delivered to the modules which have their own power system already installed. The only exception is the Russian modules which require an additional converter in the form of the ARCU to make the power from the system conform to Russian standards. The third section is the hall

thrusters, which are the electrical thrusters controlling the stations rotational gravity, attitude, and station keeping. A DDCU jumps the voltage up from 180 to 600 volts for delivery to the thrusters through a final switching unit, an SBSU. This part of the PMAD system is called the secondary bus.

The actual proposed implementation of the new PMAD system aboard the SSP is depicted in the following schematic:

Fig. 6.3.2 Proposed Implementation of the PMAD System

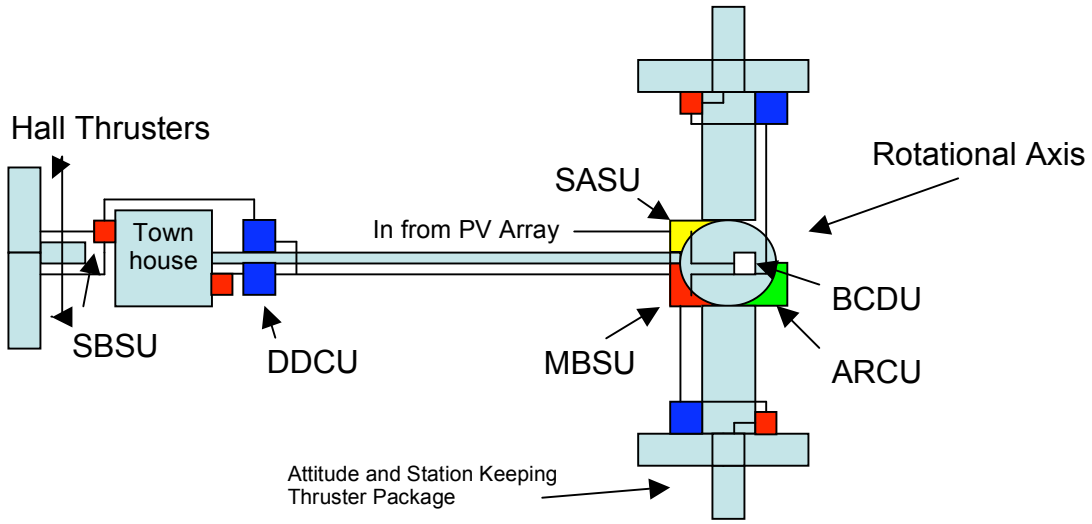


This is one side of the station, the other side is identical.

In order to maintain the two fault tolerance of the system each of the four major sections of the PV Array will have a switching unit and the MBSU will be triply redundant. The rest of the system will be built to withstand at least two faults by building the switching units and DDCUs in all areas with triple redundant circuits as well as replacement fuses and backup switches.

All of the above units will be located on the exterior of the station except for the batteries, their switching unit, and their charging/discharging units. This means micrometeoroid shielding will be needed around each unit. It also means that every unit must be self contained including the aforementioned triple redundancy in the circuits, fuses, main switching and conversion units. This drives the mass up to much more than would be expected of this system on Earth. The following table outlines the mass cost of the entire PMAD system.

Table 6.3.1 Mass Analysis

| | Quantity | Total Mass |
|---|---|---|
| SASU | 4 | 200 kg |
| BCDU | 1/battery | 100 kg |
| MBSU | 4 | 200 kg |
| ARCU | 2 | 100 kg |
| SBSU | 6 | 600 kg |
| DDCU | 6 | 600 kg |
| PCU | 2 | 100 kg |
| Wiring | N/A | 2500 kg |
| **Total** | | **4400 kg** |

## 6.4 Radiators

### *6.4.1 Thermal environment (Higgins)*

There are four sources of heating on SSP: direct sunlight, Earth's infrared emissions, sunlight reflected off of the earth, and the station's internal power. When fully constructed SSP will have a total radiating surface area of 3430 $m^2$ (see Appendix Table 1) and a maximum absorbing surface area of 936$m^2$ (see Appendix Table 2). Using the thermal equilibrium equations

$$T_{MAX} = \left( \frac{A_c G_s \alpha + AFq_1 \varepsilon + AFG_s a \alpha K_a + Q_w}{A\sigma\varepsilon} \right)^{\frac{1}{4}} \qquad \text{Eq. 6.4.1}$$

$$T_{MIN} = \left( \frac{AFq_1 \varepsilon + Q_w}{A\sigma\varepsilon} \right)^{\frac{1}{4}} \qquad \text{Eq. 6.4.2}$$

the worst-case hot condition was calculated with Eq. 6.4.1[64]. It is 261 K and this occurs when the station is closest to the sun. The worst-case cold condition was calculated with Eq. 6.4.2[64]. It is 219 K and occurs whenever the station crosses over into Earth's shadow.

### *6.4.2 Radiator Selection (Higgins)*

The same type of radiators as the ISS uses will be used on SSP. These radiators are the photovoltaic radiators (PVR) and heat rejection system (HRS) radiators. The PVR radiators will be modified slightly by adding two more panels. Each PVR array will have a mass of 1,060 kg and can reject 11.5 kW of heat. Their dimensions are 3.4 m wide by 19.6 m long. The HRS arrays are 1,220 kg and can reject 11.8 kW of heat. They are 3.4 m wide and extend 22.9 m. Both types of radiators use liquid ammonia as the heat transfer fluid[65]. The PVR and HRS radiators were chosen because they were designed specifically for the ISS and are already in use. This also adds no new costs for any

---

[64] Larson, Wiley J., Wertz, James R., eds. *Space Mission Analysis and Design, 3rd Edition*. El Segundo, California: Microcosm Press, 1999.

[65] HEAT REJECTION RADIATORS: Lockheed Martin - Missiles and Fire Control. Lockheed Martin. 3 May 2006 <http://www.missilesandfirecontrol.com/our_products/spaceprograms/SPACESTATION/product-spacestation.html>

research or development. However, both the PVR and HRS systems have a ten-year lifetime. The first array was put up in July 2002 so they will need to be replaced by 2012. Construction on SSP will begin in 2017 and will be in use until 2026, so new radiators will have to be launched for use on SSP.

### *6.8.2 Heat Loads (Higgins)*

SSP has a total surface area of 3,430 $m^2$ and an absorbing surface area of 936 $m^2$. When the station is in Earth's shadow the only sources of heat are the internal power and Earth's IR emissions.

$$Q_{Earth} = AFq_1\varepsilon \qquad \text{Eq. 6.4.3}^{64}$$

When in direct sunlight heat is absorbed directly from the sun

$$Q_{Sun} = A_C G_S \alpha \qquad \text{Eq. 6.4.4}^{64}$$

as well as sunlight that is reflected off Earth's atmosphere.

$$Q_{Albedo} = AFGsa\alpha K_a \qquad \text{Eq. 6.4.5}^{64}$$

The amount of heat the station radiates is dependant on the surface temperature.

$$Q_{out} = A\sigma\varepsilon T^4 \qquad \text{Eq. 6.4.6}^{64}$$

Table 6.4.3. Heat Fluxes

| | Hot (kW) | Cold (kW) |
|---|---|---|
| Sun | 247 | 0 |
| Earth reflected by Sun | 101 | 0 |
| Earth IR | 222 | 222 |
| Internal power | 300 | 300 |
| Total Heat Input | 870 | 522 |
| Radiated Heat | 722 | 358 |
| Remaining | 148 | 164 |

There is 164 kW of excess heat to be radiated. To reject the 164 kW eight PVR and six HRS radiator arrays will be used, this will radiate 165 kW of heat, and have a total mass of 15,800 kg.

### *6.4.3 Position of radiators (Akalovsky)*

The radiators will be positioned so that they are never perpendicular to the solar rays 6 Heat Rejections System (HRS) radiators are positioned on the main truss along with 4 Photo Voltaic Radiators (PVR). There will also be 2 PVR radiators with each set of solar arrays on the non spinning part. The 4 PVR radiators on the non spinning portion will be connected to the trusses 2 on P6 and 2 on S61 as shown in figure 6.4.1. On the main truss 2 PVR radiators will be put on P4 along with 2 on S4 as shown on figure 6.4.2. The HRS radiators are mounted in sets of 3 and there will be 1 set on P1 and 1 set on S4 as shown on figure 6.4.2. All of these radiators will be attached using the connection points already located on the truss segments for the International Space Station (ISS).

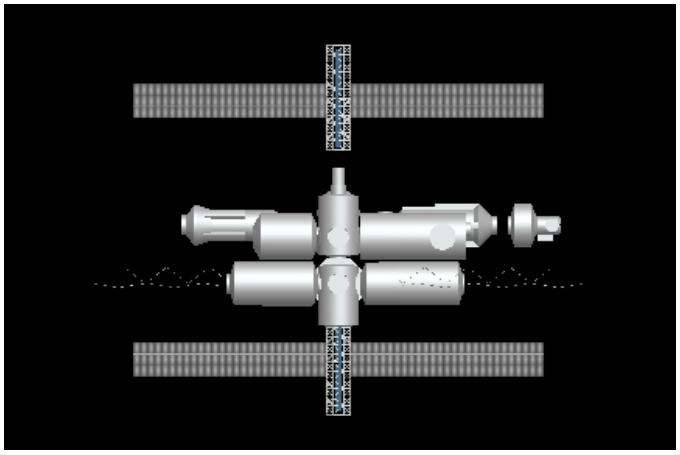

Figure 6.4.1

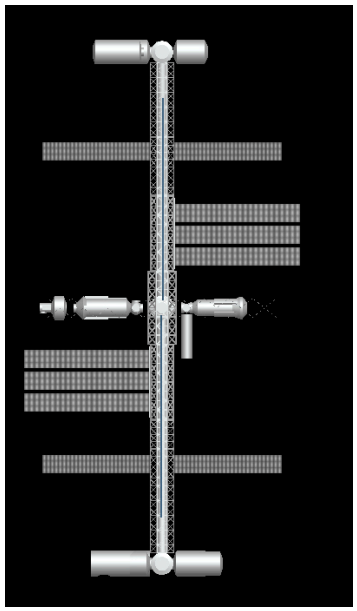

Figure 6.4.2

### *6.4.4 Gimbaling radiators (Akalovsky)*

The radiators are gimbaled so when the station is not spinning the radiators can be made parallel with the incoming solar rays. Each PVR radiator is gimbaled and each HRS mount holding 3 radiators is gimbaled. The radiators are gimbaled using rotary joints already located on the truss segment from ISS. Each rotary joint has 105 degrees of free motion.

## 6.5 Communications (Ries)

### *6.5.1 Overall System Layout*

Most of this layout will be discussed in later sections, but there are a few points worth noting. One important thing to note is that, this system is two-fault tolerant. The central communication hub, located on a rack in Destiny, is a possible single point of failure which could knock out HDTV and high bandwidth communication with the ground. However, the backup antenna will have an auxiliary audio system for voice communication. The docked CEVs' communication system can be used in the event of a failure in the backup and primary systems.

### *6.5.2 Primary Communications System*

A Ku-band directional antenna was chosen to relay data through the Tracking and Data Relay Satellite System (TDRSS). The data for this system will be compressed (requires 150 W of power). This system is required to broadcast two HDTV channels that require a data stream of 14 Mbps each. The total data stream available for a 58.5 MHz band is 47 Mbps, which would leave 16.7Mbps available for other communications such as voice and data. The antennas will have to be re-pointed approximately every minute to maintain a beam on the TDRSS satellite. Factors which affect how often the antenna needs to repoint to keep the target TDRSS satellites on beam are solar precession of the station (1°/day), TDRSS motion relative to the station (up to 2.25°/minute), and station wobble (oscillation with period of 26s and magnitude of 1.8 degrees). A directional antenna was required in order to have an appropriate signal strength ratio at the receiver. Four antennas were chosen to ensure constant contact with the ground. In the event of a single antenna failure, the antennas' coverage overlaps for almost all of the sky except for the area blocked by the other communication antenna on that truss. Two antennas would have been sufficient, but for balance and redundancy, four were included. The antennas are attached to the inertial truss for structural reasons.

Antenna Characteristics

| | |
|---|---|
| Diameter | 0.75m |
| Beamwidth | 2.25 ° |
| Gain | 30 dB |
| Type | Parabolic Dish |
| Mass | 25 kg Each |
| Number | Four |

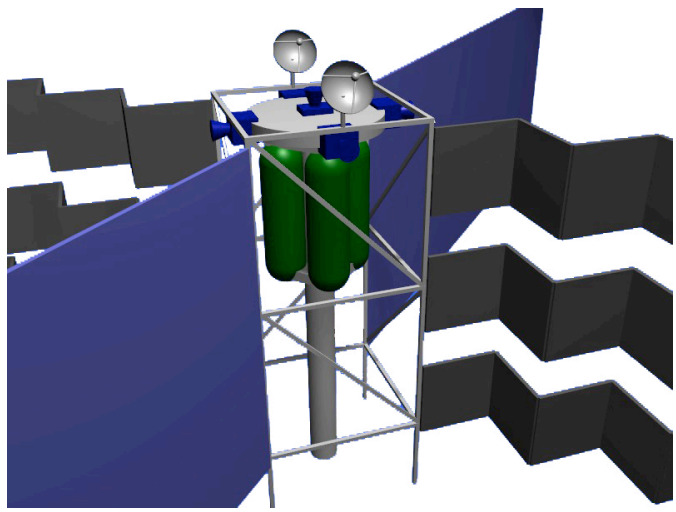

The antennas are 0.75m in diameter because of the earlier planned location of L1. A beamwidth of 2.25 degrees was equivalent to the Earth's diameter from L1. In addition, numerous sources and methods corroborated the analysis for this particular antenna, specifically in regards to gain. With the move to LEO, the beamwidth became relatively unimportant, but the gain was just as critical. Beamwidth and gain are inversely related, and while a higher beamwidth would be desirable for pointing, the gain/power requirement was much more important driving factors.

The primary communication system is run through TDRSS rather than ground stations because of the need for continuous availability. Due to the fact that ground stations cannot be cheaply located in large expanses of ocean, SSP cannot be within communication range of a ground station 100% of the time. It can, however, always see a TDRSS satellite. Therefore, in order to maintain the required constant HDTV channels and data downlink, the system is run through TDRSS.

A few low power amplifiers or repeaters may need to be added to the system to keep the signal from degrading in the wiring of SSP as the signal travels from Destiny to the main

communication antennas. However, the mass and power contribution of such a system relative to that of the rest of the communication system is negligible.

### *6.5.3 Backup Communication System*

The backup system was chosen to utilize an omni-directional antenna or antennas. Omni-directional antennas are effectively negligible in mass (<1kg). In addition, they can function regardless of any failure in maintaining a constant orientation. Using a lower data bandwidth (120 kHz) allows the signal to reach TDRSS using only 50 W of electricity. This system will utilize the S-band, which is less sensitive to atmospheric disturbances. Other designs other than an omni-directional antenna were not considered, due to the importance of reliability in a backup system.

### *6.5.4 Station to Ship Communication*

The Destiny module is already equipped with equipment for UHF communications with astronauts on EVA and vehicles approaching for docking. Over the short distances required for terminal approach and docking (7 km) the existing system provides all necessary communication and uses an omni-directional antenna.

### *6.5.5 Internal Communications*

The internal communication system of SSP will be the system currently aboard ISS. ISS has a total of 13 audio terminal units located throughout the station. These devices are essentially glorified telephones and can be used to communicate both within the station and to the ground via the main communication system. These devices have no redundancy, but are interchangeable and their wiring network has full redundancy. The only change required by SSP will be adding connecting cable between the Townhouses and the central hub.

### *6.5.6 Supporting Calculations*

Below is an example of a noise cascade. The noise cascade keeps track of the strength (temperature) of the signal and noise per unit frequency. Dividing these two quantities give the infamous Signal-to-Noise (S/N) or Carrier-to-noise (C/N) ratio. The different media through which our signal passed were each treated as an amplifier, attenuator, or noise source.

Gain for the antenna was estimated to be approximately the sky area over the beam area multiplied by an efficiency factor. This technique produced results in line with data on real life antennas. Gain for an omni-directional antenna was taken to be zero.

The deep space attenuation was difficult to compute. It was taken to be approximately equal to the area of the beam at the antenna and the area of the beam at the destination. This method leads to a 1/R^2 power law, as was expected.

The required S/N of satellite receiving equipment in the Ku-band with a similar bandwidth to our own was 13.5 dB. Since the largest contribution to noise comes before the amplifiers in the receiver, the receiver contribution to noise was considered well approximated by room/atmospheric temperature/blackbody temperature, since the antenna of the receiver on Earth or TDRSS would typically operate at such a temperature.

Table 6.5.2. Sample Noise Cascade

| NOISE CASCADE - Space Station Phoenix, Backup Antenna, to GROUND | | | | | Power Power | Transmitter Power (W) | Bandwidth (Hz) | PSD (W/Hz) | PSD (K) |
|---|---|---|---|---|---|---|---|---|---|
| | | | | | 33.33 | 10 | 1.20E+005 | 8.33E-005 | 6.04E+018 |
| Component | Noise Temp(K) | Gain(db) | Signal(K) | Noise (K) | S/N (dB) | k= | 1.38E-023 | | |
| Transmitter | 0 | 0 | 6.04E+018 | 6.04E+009 | | | | | |
| Antenna | 283 | 0 | 6.04E+018 | 6.04E+009 | | | | | |
| Deep Space | 4 | -118.95 | 7.69E+006 | 4.01E+000 | | | | | |
| Atmosphere | 10 | -9 | 9.68E+005 | 1.05E+001 | **49.65** | | | | |
| Detector | 290 | 30 | 9.68E+008 | 3.01E+005 | **35.08** | | | | |

Below is a summary of all the different noise cascades calculated for SSP. Calculations without atmosphere utilize TDRSS for relaying communications data. Ku-band system is high bandwidth. S-band system is a low bandwidth system for backup communications. The results in this table are the basis for the selection of the communication system for SSP.

**Table 6.5.3. Various important results of noise cascade analyses**

| System | Power Used (W) | Atmosphere? | Distance attenuation (dB) | Omni-directional antenna? | S/N(dB) |
|---|---|---|---|---|---|
| Ku-band | 150 | No | 153 | No | 20.22 |
| Ku-band | 33333 | No | 153 | Yes | 13.69 |
| Ku-band | 134 | Yes | 119 | Yes | 14.22 |
| S-band | 34 | Yes | 119 | Yes | 35.08 |
| S-band | 34 | No | 153 | Yes | 13.5 |

### *6.5.7 Alternate Systems*

One alternate consideration for the design of SSP's communication system was using laser-based communications. A laser serves the exact same function as an antenna: increasing the gain of a system by focusing the signal into a narrow beam. The only differences between a laser and antenna are that the laser's gains are higher and the laser's beams are much narrower. The laser also operates at a higher frequency and data rate than a radio frequency system. However, a laser system is not a good choice for SSP. First, the station wobbles too much. Laser beams are only a fraction of a degree across, but SSP wobbles by more than a degree during normal operation. Therefore, our station's pointing accuracy is too limited to use a laser system. Laser communication in space is also fairly new. Only a few testbed spacecraft have used it so far. No laser-based satellite network (i.e. An optical equivalent of TDRSS) exists yet, so an entire new network would have to be created for SSP to use. Lastly, lasers communication systems are designed for short bursts of high-speed traffic to ground stations. While useful for science missions, laser communication systems would not be useful for SSP, as its HDTV channels must run continually, rather than be transmitted in bursts.

## 6.6 Electronic Systems (Robinson)

### *6.6.1 Command & Data Management Hardware*

The command and data handling system from ISS will be maintained for Space Station Phoenix. This system consists of computers called multiplexer/demultiplexers (MDMs) that communicate with each other over a MIL-STD-1553B network. The network is arranged in a three-tiered architecture. Pictured below is a layout of the different MDMs and how they are connected. The numbers in each of the boxes represents the number of MDMs in that system.

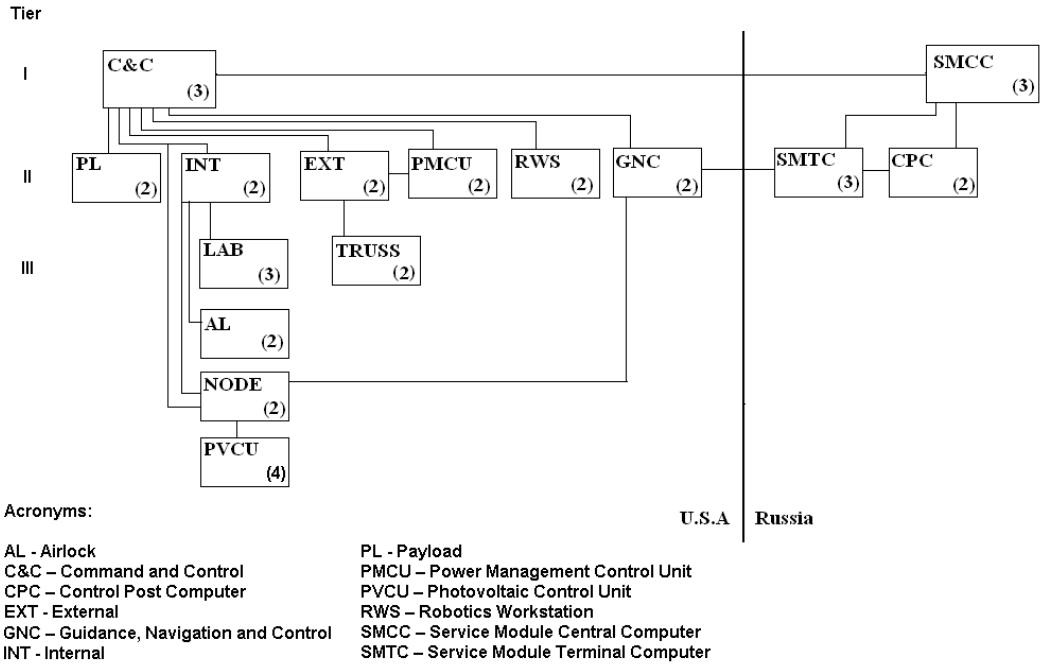


Figure 6.6.1. SSP MDM Layout

Tier one, the control tier, is where all the commands to the different sub-systems originate. This tier consists of the three command and control MDMs and the crew interface laptops on the American side, and the Service Module Control Computer on the Russian side. The crew enters commands to the tier one MDMs though the crew-interface laptops and the commands are then processed and sent to tier two.

Tier two, the local tier, consists of the MDMs that control the different sub-systems on the station. These MDMs contain system specific software needed to perform various functions such as life support, scientific payload control and guidance navigation and control. These computers accept commands from tier one and they in turn send commands to tier three.

Tier three, the user tier, consist of the MDMs that interface with the different sensors and effectors located throughout the station. They accept commands from tier two and they in turn send commands and read feedback data from the sensor and effectors.

To conserve power not all of the MDMs will be on at any one time. For 2 fault tolerant systems, such as C&C, one MDM will be on as the primary, one will be on as a warm standby and the last one will be off. If the primary MDM were to malfunction the secondary would take the roll as primary and command the final MDM to be on as secondary. For1 fault tolerant systems, such as the payload MDMs, one will be on as primary and one will be off. If the primary here goes down then the secondary would be turned on by its bus controller.

### *6.6.2 Truss MDMs*

Due to the new configuration of the station, two new identical tier three MDMs will have to be added. They will be called the Truss MDMs and they will receive data from the accelerometer and load cells that will be mounted on the outside of the station over a RS-485 serial connection. The Truss MDMs themselves will be mounted on the S0 truss.

The housing of the MDM will be a cube that measures approximately .305 m on a side. They will contain 1 processor board (10 watts), 1 MIL-STD-1553B board (3.6 watts each), 1 mass memory module (5 watts) and 7 4-port serial I/O boards (1 watt each).[66] The total power consumption of each MDM is approximately 25.6 watts. The MDMs will have an operating temperature of range of -55 to 125 ºC. This corresponds to the required operating temperature range for military electronics dictated in the document MIL-PRF-38535. The tables below show the maximum and minimum equilibrium temperatures of the MDMs on the dayside when they are on and when they are off.

| Area Incident (m^2) | 0.131 | Rectangle section of .3048m cube | | |
|---|---|---|---|---|
| Total Surface area (m^2) | 0.56 | | | |
| | | | | |
| Coating | α | ε | Teq (K) Power On | Teq (K) Power Off |
| polished aluminum | 0.35 | 0.04 | 516.11 | 474.53 |
| gold on aluminum | 0.26 | 0.03 | 527.15 | 473.40 |
| silicate white paint | 0.14 | 0.94 | 203.79 | 171.40 |
| after three years | 0.27 | 0.94 | 224.19 | 201.99 |
| Silicone white paint | 0.19 | 0.88 | 215.87 | 188.07 |
| after three years | 0.39 | 0.88 | 243.03 | 225.12 |
| epoxy black paint | 0.95 | 0.85 | 293.59 | 283.69 |
| Sulfuric acid anodize | 0.49 | 0.85 | 255.98 | 240.41 |
| Acrylic Black paint | 0.97 | 0.91 | 289.94 | 280.35 |

Table 6.6.1. Maximum dayside temperatures for Truss MDMs bases on coating

[66] König, H., U. Schloβstein, and C. Taylor. "Standard Payload Computer for the." ESA Bulletin February 1998 5 May 2006 .

| | | | | |
|---|---|---|---|---|
| Area Incident ($m^2$) | 0.08 | Equilateral Triangle section of .3048m cube | | |
| Total Surface area ($m^2$) | 0.56 | | | |
| | | | | |
| Coating | α | ε | Teq (K) Power On | Teq (K) Power Off |
| polished aluminum | 0.35 | 0.04 | 475.92 | 419.78 |
| gold on aluminum | 0.26 | 0.03 | 490.23 | 418.77 |
| silicate white paint | 0.14 | 0.94 | 193.10 | 151.62 |
| after three years | 0.27 | 0.94 | 208.26 | 178.68 |
| Silicone white paint | 0.19 | 0.88 | 202.65 | 166.37 |
| after three years | 0.39 | 0.88 | 223.45 | 199.14 |
| epoxy black paint | 0.95 | 0.85 | 264.83 | 250.95 |
| Sulfuric acid anodize | 0.49 | 0.85 | 234.01 | 212.67 |
| Acrylic Black paint | 0.97 | 0.91 | 261.45 | 248.00 |

Table 6.6.2. Minimum dayside temperatures for Truss MDMs bases on coating

As can be seen from the tables above the epoxy black coating provides the best performance in that it maintains the MDM well within its required temperature envelope at its maximum and minimum area incident orientations regardless of whether the MDM is on or off. However in the shade the MDMs will reach a temperature of –98 ºC. To maintain the MDM at 0 ºC when it is off a heater is needed. To determine hw much power the heater needs to maintain a temperature of 0ºC we use the equation:

$$P_{\text{int}} = \left(T^4 - T_{env}^4\right)\varepsilon\sigma * SA - I_s \alpha A_i$$

Tenv = 4 ºC. From this equation it is determined that the MDM need to have a heater that produces 150 watts of power when the MDM is off when it is on the heater will need to produce 124.4 watts.

### *6.6.3 Accelerometers*

There will be two accelerometers located on each truss section for a grand total of 12. The purpose of the accelerometers will be to measure the movements of the truss sections, detect bending in the truss and perform structure health monitoring by detecting changes the vibration signature of the truss.
The accelerometers will be required to measure accelerations of ±1.0 g with a resolution of 1 milli-g. The housing of the accelerometer will be a cube that measures approximately .0508 m on a side. The accelerometers will have an operating temperature of range of -55 to 125 ºC.

There are two main MEMS technologies to look at when choosing accelerometers. MEMS accelerometers either use a proof mass with differential capacitors or they detect changes in convection currents of a heated gas.

Differential capacitance based accelerometers use a solid proof mass mounted on springs. Defections in the mass spring system are measured using a differential capacitor that consists of a charged plate on the proof mass and another fixed plate adjacent to the proof mass. Any motion of the proof mass will unbalance the capacitor.

Thermally based accelerometers use a heated gas to detect acceleration. These devices consist of a gas cavity, a heating element and temperature sensors. Motion causes the heated gas to move and temperature sensors detect these movements.

Both technologies have their strengths and drawbacks. The accelerometers that use differential capacitance are more resistant to temperature changes than the thermally based ones. The ADXL203 differential capacitance based accelerometer made by Analog Devices Inc. has a typical 0g offset vs. temperature of 0.1 mg/ºC.[67] On the other hand the MXA6500M accelerometer from MEMSIC Inc. has a typical 0g offset vs. temperature of 1.5 mg/ºC[68]. These ratings are determined at 25 ºC, so the MEMSIC device will have a 0g temperature offset of 150 mg at 125 ºC and 120 mg at –55 ºC. The Analog devices sensor will have a 0g temperature offset of 10mg and 8mg respectively. It is important to note the neither the ADXL203 nor the MXA6500M are rated for space operations. They are listed to only to show what the technology is capable of.

Since testing and calibration of the accelerometers is done at 25 ºC, it was decided to maintain the temperature of the accelerometer at 25 ºC. To achieve this the correct surface coating must be chosen and the required internal power must be determined. For our application the accelerometer will be modeled as a cube that measures .0508m on a side. To choose a coating the candidates' performance must be judged when the sensor is in the sunlight. The tables below lists the equilibrium temperature that the accelerometers will reach based on the minimum and maximum incident area and the surface coating. The minimum and maximum area incident are the equilateral triangle and rectangular cross-section of the cube, respectively.

| | Max | Min | | |
|---|---|---|---|---|
| Area Incident (m^2) | 0.0036 | 0.0022 | | |
| Total Surface area (m^2) | 0.01548 | | | |
| Coating | $\alpha$ | $\varepsilon$ | Teq max (K) | Teq min (K) |
| polished aluminum | 0.35 | 0.04 | 474.53 | 419.78 |
| gold on aluminum | 0.26 | 0.03 | 473.40 | 418.77 |
| silicate white paint | 0.14 | 0.94 | 171.40 | 151.62 |
| after three years | 0.27 | 0.94 | 201.99 | 178.68 |
| Silicone white paint | 0.19 | 0.88 | 188.07 | 166.37 |
| after three years | 0.39 | 0.88 | 225.12 | 199.14 |
| epoxy black paint | 0.95 | 0.85 | 283.69 | 250.95 |
| Sulfuric acid anodize | 0.49 | 0.85 | 240.41 | 212.67 |
| Acrylic Black paint | 0.97 | 0.91 | 280.35 | 248.00 |

Table 6.6.3. Max & Min dayside temperatures for accelerometers

[67] "Analog Devices ADXL203 - High Precision, ±1.7g, Dual Axis Accelerometer." Analog Devices . March 2006. Analog Devices . 11 May 2006 < http://www.analog.com/UploadedFiles/Data_Sheets/178749895ADXL103_203_a.pdf>.
[68] "MEMSIC Low Cost, Low Noise ±1 g." MEMSIC. 22 March 2005. MEMSIC. 11 May 2006 <http://www.memsic.com/memsic/data/products/MXA6500G&M/MXA6500G&M.pdf>.

As can be seen from the charts the epoxy black paint offers the best performance. This coating gets the accelerometer the closest to 25 ºC without going over. By doing this the necessary internal power can be minimized while the sensor is in the sun.

The sensor needs to produce enough internal power when it is in the shade to maintain its temperature at 25 ºC. To determine what the internal power needs to be to maintain this temperature we use the equation:

$$P_{\text{int}} = \left(T^4 - T_{env}^4\right)\varepsilon\sigma * SA - I_s \alpha A_i$$

From this equation it is determined that the accelerometers need to have an internal power of 5.89 watts when the sensor is in the shade and 1.13 watts when it is in the sun. Both the MEMSIC and Analog Devices sensors produce about 0.06 watts of heat, so they will need a heater that is connected to a thermostat.

This thermal analysis is very simplified and assumes that sensors are either in constant sunlight for long period of time or in darkness for long periods. In reality, even when the station is in sunlight the sensors may be shaded by parts of the station based on how the station is oriented and whether or not the station is rotating. It is conceivable to think that the sensor's temperature would stray from 25 ºC for short periods of time. This analysis however, does cover the worst-case scenarios.

The differential capacitance accelerometers are more resistant to temperature change than the thermally based ones, but they have moving parts so they are more prone to failures due to mechanical wear and shocks. The MEMSIC accelerometer has no moving parts and can withstand a maximum acceleration of 50,000g while the Analog Devices accelerometer can withstand a maximum acceleration of 3,500g. This lower shock tolerance need not be a limiting factor if the shock loads for the rest of the payload can be maintained at a level lower than 3,500g.

While the thermally based accelerometers show promise, it was decided to use the differential capacitance based accelerometers. Their temperature insensitivity makes them the well suited to provide accurate measurements in an environment where the temperature can vary widely due to the rotation of the station.

### *6.6.4 Tension Cable Load Cells (Robinson)*

There will be one load cell for each tension cable for a grand total of eight. They will be used to measure the tension in each cable. The maximum force to will be required to detect is 750 kN, and meet the same environmental requirements as the accelerometers. To achieve this, the same method of temperature analysis is used. However instead of using a cube as the housing, a cylinder with a height of .0508m and a radius of .0254 is used. The tables below detail the result of the dayside analysis.

| | Min | Max | | |
|---|---|---|---|---|
| Area Incident (m^2) | 0.002 | 0.0026 | | |
| Total Surface area (m^2) | 0.01216 | | | |
| Coating | α | ε | Teq Min (K) | Teq Max (K) |
| polished aluminum | 0.35 | 0.04 | 433.85 | 462.21 |
| gold on aluminum | 0.26 | 0.03 | 432.82 | 461.11 |
| silicate white paint | 0.14 | 0.94 | 156.71 | 166.95 |
| after three years | 0.27 | 0.94 | 184.67 | 196.74 |
| Silicone white paint | 0.19 | 0.88 | 171.95 | 183.19 |
| after three years | 0.39 | 0.88 | 205.82 | 219.27 |
| epoxy black paint | 0.95 | 0.85 | 259.37 | 276.32 |
| Sulfuric acid anodize | 0.49 | 0.85 | 219.80 | 234.17 |
| Acrylic Black paint | 0.97 | 0.91 | 256.31 | 273.07 |

Table 6.6.4. Max & Min dayside temperatures for load cells

Similar to the load cells the housing will be coated in epoxy black paint. The load cells consist of a series of strain gauges that are connected through a wheatstone bridge configuration. The output of strain gauges is affected by temperature so it will be necessary to minimize the temperature variations to during orbit to maintain an accurate reading.

Like the accelerometers, the load cells are tested at 25 ºC, so it was decided to maintain the load cells at this temperature. Using the same equation as for the accelerometers, it was determined that the load cells need to have and internal power of 4.63 watts in the shade and 1.19 watts in the sun.

# VII. Station Orientation and Control

## 7.1 Orientation (Schoonover)

There are four main factors that needed to be considered when deciding the orientation of the station; thermal effects, power effects, communications, and perturbation effects. During the design of the station, the location of the station changed from the LaGrange point between the Earth and Moon (L1), and a low earth orbit (LEO). Each location has a unique environment that affected the orientation of the station.

At the L1 point, there is constant sun with a gravitational saddle point that minimizes the need for orbit maintenance. However, the location has key problems in regards to thermal protection and power needed for communications.

The orientation chosen has the rotation axis pointing toward the sun but parallel to the Sun – Earth orbital plane. The orientation is utilized to allow for consistent power, communications, and to protect from thermal effects and allow for ease in perturbation effects.

The thermal environment at L1 is dangerous to the station and its habitants, because the station will be in consistent sunlight the entire mission. To protect the station from this thermal environment, it would be necessary for the entire station to thermally protected, which adds more required mass for launch. The orientation was designed to minimize the amount of thermal protection needed, by minimizing the amount of surface area that is exposed to direct sunlight. In addition, by utilizing the solar arrays as thermal shields, it would decrease on the amount of thermal protection for launch. Another key issue is the thermal loads placed on surfaces where sunlight barely touches the surface. Here the temperature gradient goes from 120 C to -120 C in a very small area. The orientation chosen attempts to prevent the least amount of surface area that is under these thermal loads. The townhouse modules would be the primary modules with these thermal loads, however these modules in the townhouses already have thermal protection for these types of loads.

Because of the nearly consistent sun exposure at L1, there is a limitless source of power available to the station. The main requirement is to have the solar arrays pointed toward to the sun to allow for full solar exposure for the array. With this in mind, the orientation allows the solar arrays to be always in full sun exposure. By having the rotation axis consistently pointing toward the sun, it requires little or no solar array gimbaling.

Communications is essential for any mission for directions and for emergencies. To have full communication coverage the communications dishes must be visible to the Earth, which for some orientation would require constant dish pointing. However, over extended time, communication dishes should not be required to have constant pointing because of possible motor failures. To account for this the orientation chosen allows the station to have two dishes pointing toward the Earth at any specific time. This design is used for double redundancy for the communications.

Gravity considerations at L1 are ideal for orbit maintenance and attitude control, because of the gravitational saddle point. The gravitation saddle point has the gravitational effects of the Earth and the Moon canceled out. With this in mind, the only major perturbation effects are solar pressure, and solar gravity. With the rotation axis always pointing toward the sun, the solar pressure and solar gravity perturbation acts parallel to that axis. This decreases the perturbation torques placed on the station and translational only moves the rotation axis up and down. With this orientation, it minimizes the attitude thrusters required and the amount of translational orbit maintenance required for the station to remain at the L1 point.

However, with the relocation of the station from L1 to LEO, the station's environment changes drastically.

Upon extensive analysis, the best orientation is one that has the rotation axis projection on the earth-sun orbital plane directed toward the center of the sun, while having the rotation axis orthogonal to the radial direction of the earth-station orbit.

The thermal environment changes drastically because the station is no long in constant sun. Because the station is in LEO, the station will periodically enter darkness every 91 seconds, which means the key problem is the thermal loads placed on the entire surface of the station when it goes from darkness to light and vice versa. As was stated before, the modules that are currently in the ISS are designed for these thermal loads. The orientation decision was therefore not dependent upon the thermal environment.

To power the station with solar arrays, it is essential that the station be configured to allow for full solar exposure during sunlight periods. Because of the periodic nature of the orbit in regards to sunlight exposure, it is necessary for the solar arrays to be at it is highest solar exposure percentage to acquire enough solar energy to power the station and recharge the batteries. Because of the implementation of 'inertial' trusses that allow for direct pointing toward the sun, the power considerations became much simpler. Throughout the years, the station 'inertial' sections will be rotating to allow for the face of the arrays to be always pointing toward the sun. The projection of the rotation axis onto the earth-sun orbital plane must be in the direction of the sun to reduce the amount of gimbaling for the solar arrays. Because of the spinning nature of the station, this specific orientation is no different to any other orientation that has the rotation axis perpendicular to the velocity vector.

To minimize the mass needs for the communication system, the orientation must be set in a way to reduce the number of satellite dishes needed to meet this requirement. Assuming that the rotation axis of the station is perpendicular to the velocity vector, trade studies show that as the rotation axis angle aligns perpendicular to the radial direction, the number of satellite dishes decrease and the coverage capability increases. Further details are found in the communication breakdown.

The last major consideration for the orientation is the method in which the station maintains the set orbit and orientation. Perturbations effect the translational location of the station as well as the attitude of the station. To maintain the station, thrust maneuvers needs to be conducted along

the rotation axis. With this in mind, the best orientation to balance to the thrust is one where the two thrusts are of equal values. This prevents the station from translating in unwanted directions and affecting the attitude of the station. The best orientation allows the thrusters propellant mass and thrust magnitude balanced by orienting the rotation axis orthogonal to the radial direction. In addition, perturbation effects change the attitude of the station especially Earth's gravity gradient. With the moment of inertia calculated, the station will want to rotate to have the station's lowest moment of inertia axis directed toward the center of the Earth. However, the lowest moment of inertia axis is rotating, so it is impossible to that requirement. Upon further research, the station remains relatively stable without the magnitude of the gravity gradient perturbation affecting the attitude when the rotation axis is perpendicular to the radial direction. As the smallest moment of inertia axis rotates the gravity, gradient will want to slow down the rotation and speed up the rotation, but with adequate spin rate maintenance, this phenomenon can be remedied.

## 7.2 Stability (Kavlick)

### *7.2.1 Principal Axes Reference Frame*

The convention of using a tilde to denote that a parameter is with respect to the principal axes reference frame has been adopted throughout this stability analysis.

### *7.2.2 State of an Object*

The state of an object in space is defined by its 3-dimensional position, 3 components of velocity, 3 orientation angles, and 3 angular velocities. Therefore, 12 non-redundant parameters provide the state of an object for a given instant in time. These are:

$$x, y, z, v_x, v_y, v_z, \phi, \theta, \psi, \tilde{w}_x, \tilde{w}_y, \tilde{w}_z$$

The first 6 parameters, those for position and velocity, provide information for the object's center of mass only and, so, have no bearing on its stability. The last 6 pertain to the dynamics of the object's body with respect to an inertial frame of reference centered at the object's center of mass. For stability calculations, equations regarding orientation and angular velocity will be explored while position and velocity quantities are disregarded.

### *7.2.3 Euler's Equations*

Euler's equations define the dynamics of an undamped rigid body spacecraft. These equations were the basis for all stability calculations. For a derivation of these equations consult *Spacecraft Attitude Determination and Control* by Wertz.[69]

$$\begin{aligned} I_{xx}\dot{\tilde{w}}_x + (I_{zz} - I_{yy})\tilde{w}_y\tilde{w}_z &= \tilde{T}_x \\ I_{yy}\dot{\tilde{w}}_y + (I_{xx} - I_{zz})\tilde{w}_x\tilde{w}_z &= \tilde{T}_y \\ I_{zz}\dot{\tilde{w}}_z + (I_{yy} - I_{xx})\tilde{w}_x\tilde{w}_y &= \tilde{T}_z \end{aligned} \tag{7.2.1}$$

[69] Wertz, James R. *Spacecraft Attitude Determination and Control*. Vol. 73. Dordrecht, Holland: D. Reidel Publishing Co., 1984.

### *7.2.4 Nutation in SSP*

The spinning of the station is achieved through spin-up thrusters located at the ends of the station along the $x$-geometric axis. For rotation of the station about the $z$-geometric axis, their exhaust must be directed opposite the direction of rotation while being perpendicular to their moment arm ($x$-geometric axis) and to the axis of rotation ($z$-geometric axis). If the thrusters are not exactly perpendicular to the $z$-geometric axis, the axis of rotation will have some non-zero component in the $y$-geometric axis direction. Difficulties in precise installation of the spin-up thrusters and the impossibility of accurately controlling their exhaust direction will lead to an angular offset of the actual axis of rotation from the desired axis of rotation. For SSP, the accuracy of spin-up thruster exhaust direction is assumed to be known to within 1°. This is the first cause of nutation.

The second cause of nutation is the misalignment of the geometric axes from the principal axes. SSP is not perfectly symmetrical. The modules, of which the SSP is comprised, are not identical and must be connected through certain connection modules. Both of these reasons contribute toward the imbalance of the station. Without a system to actively control the weight distribution of the station, it is impossible to make the geometric axes of the station align perfectly with its principal axes. The station's desired axis of rotation is along the direction of the inertial trusses. Rotation strictly about this axis would create a nearly inertial environment for communications, the solar arrays, and docking. The inertial trusses, however, are along the $z$-axis direction in the geometric reference frame. Therefore, the desired angular velocity vector is not along the $z$-principal axis.

Nutation is undesirable and may be eliminated through passive or active control. For an object whose desired axis of rotation is along its principal axis with the largest moment of inertia and its nutation angle is small (on the order of a few degrees), damping due to structural or mechanical damping mechanisms will eventually eliminate its nutation and render it perfectly stable. This passive damping technique is not applicable to SSP because it would not move the desired axis of rotation to the desired $z$-geometric axis direction but rather the $z$- principal axis. Instead, nutation which results from thruster inaccuracies may be eliminated through active control damping. The station's attitude control system would be used for this purpose. Once nutation due to thruster inaccuracy is eliminated, the only remaining nutation is due to the misalignment of axes. This nutation, however, may not be eliminated permanently. The reason is the rotation axis is, in effect, purposely different from the $z$-principal axis. It is possible to eliminate this nutation for short durations with a large stabilizing torque in the principal axis reference frame. This is easily solved for in Euler's equations by setting the change in angular velocities to zero:

$$\begin{aligned} \tilde{T}_x &= (I_{zz} - I_{yy})\tilde{w}_y \tilde{w}_z \\ \tilde{T}_y &= (I_{xx} - I_{zz})\tilde{w}_x \tilde{w}_z \\ \tilde{T}_z &= (I_{yy} - I_{xx})\tilde{w}_x \tilde{w}_y \end{aligned} \tag{7.2.2}$$

### *7.2.5 Consequences of Nutation*

The effects of nutation which impact SSP are the inertial trusses will have a time varying angular deflection from the desired rotation vector direction and there will be a horizontal acceleration of the ground in the human's reference frame. SSP's configuration prevents perfect stability of the station for an indefinite amount of time. Although perfect stability is impossible to attain, all

pertinent Level 1 requirements may still be fulfilled. Therefore, instead of seeking perfect stability, perfect functionality is sought.

For primary communications to be functional, the inertial truss angular deflection must be limited to 2°. As primary communications are required for normal operation, the maximum nutation angle due to the misalignment of axes is 2°. This requirement is for the station's steady state so that a small amount of nutation does exist but does not increase in magnitude. Back-up communications are functional for any magnitude of inertial truss deflection. For communications, there is no limit to the maximum nutation angle due to thruster inaccuracy. If nutation following spin-up is greater than 2°, back-up communications may be used until the thruster inaccuracy nutation has been damped out. Finally, for docking, there must be no deflection and, hence, SSP must have the ability to eliminate nutation for short durations.

The second effect is that, in the crew's frame of reference, there will appear to be horizontal movement of the ground. For humans, the perceptible level of horizontal ground acceleration is $1/1000^{th}$ the acceleration of gravity.[70] Ground acceleration is dependent on the derivative of the nutation angle.

In summary, if horizontal ground accelerations never exceed perceptible levels, the maximum nutation angle is limited to less than 2° for steady state operation, and the station has the ability to achieve perfect stability for short durations, SSP is perfectly functional and fulfills all pertinent Level 1 requirements.

### *7.2.6 Evaluating Functionality*

SSP has three different moments of inertia. Euler's equations become non-linear when no two moments of inertia are equal. This restricts an assessment of SSP's dynamics to a numerical analysis.

The numerical analysis was accomplished in Matlab m-files. The primary user-defined-parameters include the station's rotation rate, the distance of the gravity section from the station's rotation axis, the level of accuracy of the spin-up thruster angles, the rotation angles of the geometric axes from the principal axes, and the station's principal moments of inertia. Following initial calculations, a preset simulation time length and time step are sent along with the station's initial conditions into Matlab's *ode45* ordinary differential equations solver for initial value problems. For every time step, the differential change to the station is evaluated through Euler's equations. This differential change is then numerically integrated and the new state of the station, for the next time step, is sent into Euler's equations again. This loop is then repeated until the simulation reaches the specified time length. This provides the angular velocity vector and orientation angles of the principal axes for each time step. Calculations based on this information include the maximum ground acceleration observed by the crew and the maximum angle of nutation. Output plots include accelerations and velocities in the human's reference frame, nutation angle, and angular difference between the $z$ -geometric axis and the rotation vector. An output animation of the station is also optional. Schematics of those m-files used for

[70] Lorant, Gabor. "Whole Building Design Guide: Seismic Design Principles." FAIA. 13 Apr 2006 <http://www.wbdg.org/design/seismic-design.php>.

the numerical analysis are provided in Appendix A (Note: Those m-files which are used solely for the animation have not been included because they are not essential to the functional evaluation of SSP and would render the flowcharts excessively long).

### *7.2.7 Results of the Numerical Analysis*

SSP is functional and fulfills all Level 1 requirements. Assuming the principal axes are offset from the geometric axes by the 3-1-3 Euler rotation angles of $\phi = -0.556°$, $\theta = -0.301°$, and $\psi = 0.535°$ and there exists an inaccuracy in the thruster angles of 1°, following initial spin-up to 1*g*-gravity rotation rate, the station has a maximum nutation angle of 1.92° and a maximum horizontal ground acceleration which is 11.8% of perceptible levels. Once nutation due to thruster inaccuracies has been damped out through active control, the only nutation left is due to axes misalignment. At this stage, the station is in normal operating mode. In this state, the maximum nutation angle is 0.6° and maximum ground acceleration is only 6.4% of perceptible levels. Primary communications are never compromised by nutation and horizontal ground accelerations are, on average, about an order of magnitude less than the noticeable level. A stabilizing torque will be provided by SSP's stabilizing thrusters for the short periods necessary for docking operations. To achieve this level of perfect stability, the torque applied in the principal axes frame of reference is:

$$\vec{\tilde{T}} = \begin{bmatrix} -1.30 \\ -0.43 \\ -0.002 \end{bmatrix} \times 10^4 \, N \cdot m$$

The MLM and Zvezda were added parallel to the $y$-geometric axis to create a greater degree of stability in the station. By removing the MLM and Zvezda as the stability arms, the station becomes highly unstable. The angular offset of the principal from the geometric axes raises to $\phi = -2.23°$, $\theta = -0.32°$, and $\psi = 0.5249°$. Following initial spin-up with thruster inaccuracies, ground acceleration peaks at 533% of the perceptible level and the nutation angle reaches a maximum of 95.3°. Presuming the nutation due to thruster inaccuracies may be damped out in these circumstances, ground accelerations lower slightly to 520% of the perceptible level while the maximum nutation angle is reduced to 94.0°. If perfect stability is sought, the required stabilizing torque rises to:

$$\vec{\tilde{T}} = \begin{bmatrix} 4.64 \\ 0 \\ 0 \end{bmatrix} \times 10^5 \, N \cdot m$$

This stabilizing torque is 34 times the magnitude necessary to achieve perfect stability while including the MLM and Zvezda.

## 7.3 State/Attitude Determination (Kavlick)

### *7.3.1 State Determination*

SSP will use the state determination method currently in place on the ISS because SSP will retain the ISS's existing orbit. The primary system consists of a 1.5x3.0 meter array of 4 antennas which receive GPS signals and relay them to 2 R/P sensors present in the Destiny module. The

antenna array is currently located on the S0 truss of the ISS. This array must be in an inertial environment and will be moved to one of SSP's inertial trusses while retaining its 1.5x3.0 meter geometry. GPS R/P sensors will not be moved from Destiny. This primary US system will then be supplemented by a similar arrangement of Russian GLONASS antennas and R/P sensors. The GLONASS R/P sensors will remain in Zvezda. These primary and secondary systems determine the state of the station with accuracies of 3000 ft ($3\sigma$) for position and 1000 ft in semi major axis ($3\sigma$) for velocity.[71]

### *7.3.2 Attitude Determination*

As with state determination, the current primary method of attitude determination will be reused. Currently, the ISS uses the signals received by the 4 GPS antennas to calculate its orientation through interferometry. The array geometry is important because it is large enough to allow precision attitude determination through interferometry while being close enough together to obtain integer level position resolution.[72] The ISS's secondary attitude determination system uses several Russian attitude sensors: 3 star mappers, 3 Sun sensors, 3 Earth horizon sensors, and 2 magnetometers. These serve the purpose to confirm the primary GPS interferometry data. These attitude sensors require an inertial environment to operate. SSP's inertial trusses have nutation-induced angular accelerations during normal operation and the Russian attitude sensors would be ineffective on SSP. Therefore, they will not be used. Their original use was for primary attitude determination in the beginning stages of ISS when all that was present was Zarya and Zvezda. Once the S0 truss, with its antenna array, was added to ISS (Destiny and its R/P sensors were already present), the Russian sensors became relics of an earlier configuration. Therefore, not using the Russian attitude sensors on SSP will not detract from the attitude determination's design or ability to perform its function. This method provides an accuracy of 0.5° ($3\sigma$).

### *7.3.3 Attitude Rate Determination*

ISS's primary attitude rate determination system consists of 2 RGAs. Each RGA contains 3 RLGs. The secondary system is composed of 4 Russian RLGs. The only modification to the existing attitude rate determination system will be the movement of all RLGs to SSP's center of mass. The reasoning for this movement is only at the station's center of mass is accurate measurement of the station's instantaneous angular velocities about each of its principal axes possible.

## 7.4 Chemical vs. Electric Thrusters (Pappafotis)

Another major argument essential to the development of the station, and only second, indeed, to the power generation system itself, is the propulsion system. Namely, how we will rotate the station to simulate artificial gravity and how we will keep the station in the prescribed orbit. The two options considered were chemical combustion thrusters and electric thrusters.

---

[71] Gomez, Susan. "Flying High: GPS on the International Space Station and Crew Return Vehicle." 1 June 2002. GPS World. 9 May 2006 <http://www.gpsworld.com/gpsworld/article/articleDetail.jsp?id=22573&pageID=1>.

[72] Gomez, Susan. "Flying High: GPS on the International Space Station and Crew Return Vehicle." 1 June 2002. GPS World. 9 May 2006 <http://www.gpsworld.com/gpsworld/article/articleDetail.jsp?id=22573&pageID=1>.

With $I_{sp}$s in the range of 2500-3500 it can be seen from the rocket equation that electric thrusters provides ΔV much more efficiently than even the best chemical combustion propulsor with Isps in the range of 350-400. When the calculations are run through the total savings in dollars by using electric propulsion as opposed to chemical is on the order of one billion dollars. However, many prejudices existed within the team that caused endless hours of argument over which regime would be used on SSP. These prejudices were not unfounded, specifically, on the topic of thrust. All of the electric thrusters in use presently only have thrusts ranging from about 0-1 N for a large amount of power, around 60 kWe. This would be unacceptable since too much power would be used up for a meager amount of thrust. It could take weeks or even months to spin up the station. A suitable thruster needed to be found on short notice in order to appease the doubters, in the mean time, an intense battle with the above facts ensued in order to keep hope alive.

When the future was in doubt, a thruster was found that could handle the requirements of SSP. This thruster is the Pratt & Whitney T – 220HT Hall Effect Engine. Each of these amazing engines requires only 1 kWe of power for each 0.65 N of thrust. By stacking them at any one location we can achieve spin rates within a day to get up to speed for gravity simulations. Also, with this amount of power we have the capability to use the same engine for station keeping, orbital maintenance and attitude control and save the budget of SSP a billion dollars, putting us under budget. This is arguably one of the most important developments in the history of SSP. Not only will it be the hardest to implement due to the control system requirements of station keeping over long periods of time, but it is also the most ground breaking. The topic is covered in more detail elsewhere in this section.

## 7.5 Attitude Control (Mackey)

The attitude of SSP is controlled by Pratt & Whitney T-220 HT Hall Effect Thrusters. These are electric thrusters which are capable of producing up to 12 N of thrust each. The main attitude control thrusters are located on each end of the z-axis. There are four thrusters total, pointed in the +x, -x, +y, and -y directions on each end of the z-axis. There is also a fifth thruster on each end pointed out the ± z-axis for orbital maintenance. The moment arm of the z-axis is approximately 20 m out the +z direction and 15 m out the -z direction. This gives a maximum torque of 420 N-m in the ±x and ±y directions. To create a torque in the z-direction, the spin-up thrusters located on the Townhouses will be utilized. The Townhouses are located 44.5 m out along the ± x-axis. Using one thruster on each townhouse for attitude control maneuvers yields a maximum torque on 1068 N-m about the z-axis.

Due to the spin rate of the station required to simulate partial gravity, the station will have a very high angular momentum while it is rotating. The angular momentum is determined by $H = I\omega$, where I is the station's moment of inertia and ω is the rotational velocity. As the rotational velocity increases to simulate higher levels of partial gravity, the angular momentum also increases. Angular momentum is actually a vector that points perpendicular to the rotation vector, or parallel to the rotational axis. Since SSP is rotating about its z-axis, the angular

momentum vector will also be pointing out the z-axis, in either the positive or negative direction depending on the direction of the spin.

Due to this high angular momentum, re-orienting the station requires a very high level of torque. The method of changing the attitude of the station while it is spinning is known as precession. A torque imparted on the station will create a change in the direction of the angular momentum, but not in its size. This change in direction will cause the station to begin to rotate in a direction perpendicular to both the angular momentum vector and the vector of the torque applied. Since the station is rapidly rotating about its z-axis, the attitude only needs to be monitored about the x- and y-axes. To precess the station about the x-axis requires a torque applied in the negative y-direction. To precess the station about the y-axis requires a torque applied in the positive x-direction. The torques are produced by the attitude control thrusters that are mounted on either end of station's z-axis. The rate of the change in direction of the angular momentum vector is known as the angular velocity of precession. This rate is defined by the equation $\vec{\tau} = \vec{\Omega}_P \times \vec{H}$ where $\vec{\Omega}_P$ is the angular velocity of precession, $\vec{H}$ is the angular momentum vector, and $\vec{\tau}$ is the torque applied to the station.

Table 7.5.1

| Partial Gravity (g) | Angular velocity (rad/s) | Angular velocity of precession (rad/s) |
|---|---|---|
| 0.00 | 0 | 0 |
| 0.25 | 0.234 | 0.00453 |
| 0.38 | 0.287 | 0.00370 |
| 0.50 | 0.331 | 0.00321 |
| 0.75 | 0.405 | 0.00262 |
| 1.00 | 0.468 | 0.00227 |

At higher angular velocities, more torque is required to precess the station. Similarly, the same torque applied to the station at varying rotation rates will yield lower angular velocities of precession as the rotation rate increases. Since the attitude control thrusters on the station are going to operate at a maximum of 12 N of thrust each, the max thrust available is 24 N (one thruster firing on each end of the z-axis). Based on the fixed length of the axis, the maximum torque available about the x- and y-directions will be 420 N-m. This maximum torque will lead to an angular velocity of precession that decreases as the rotation rate of the station to simulate partial gravity increases. Table 7.5.1 shows the rotational rates and angular velocities of precession for the varying partial gravity levels.

There are two different methods through which the station could be reoriented once it is misaligned. The thrusters could fire at the maximum thrust of 24 N and reorient the station as quickly as possible. Also, the station could be reoriented at a constant angular velocity of precession which, if low enough, will require less thrust and power from the thrusters, but the maneuver will take longer. Despite requiring less torque to precess the station, the second method requires more propellant mass due to the substantially longer duration that the thrusters must fire. Table 7.5.2 shows the differences in propellant mass and power consumption for each of these methods, with the constant angular velocity of precession at 0.4 º/hour.

Table 7.5.2

| | Constant Angular Velocity of Precession (0.4 º/hr) | | | Constant Thrust (24 N) | | |
|---|---|---|---|---|---|---|
| Simulated Gravity (g) | Propellant mass (kg) | Power Consumption (kW) | Power Consumption (kW-h) | Propellant mass (kg) | Power Consumption (kW) | Power Consumption (kW-h) |
| 0.250 | 8.60 | 30.3 | 152 | 0.49 | 40.00 | 124.8 |
| 0.375 | 10.5 | 37.2 | 186 | 0.60 | 40.00 | 152.8 |
| 0.500 | 12.2 | 42.9 | 215 | 0.69 | 40.00 | 176.5 |
| 0.750 | 14.9 | 52.6 | 263 | 0.85 | 40.00 | 216.1 |
| 1.000 | 17.2 | 60.7 | 303 | 0.98 | 40.00 | 249.6 |

The main perturbations on the station are docking forces, atmospheric drag, gravity gradient, solar radiation pressure, and magnetic field force. However, not all of these perturbations affect the station's attitude. The atmospheric drag is only a factor on the station's altitude. The station will need to be reboosted periodically in order to maintain its desired altitude above the Earth. This force however, does not affect the station's attitude in a significant way and can be neglected. The gravity gradient is another force that can be neglected. This is due to the orientation of the station. A spacecraft will naturally seek an orientation where its minimal moment of inertia axis, or the longest axis, will align itself along the vector from the Earth's center of gravity to the station's center of gravity. In the case of Space Station Phoenix, this would mean that the x-axis, the axis containing the townhouses on either end, will be pointed along the vector from the station's center of gravity to Earth's center of gravity. The orientation of the station was chosen to be in this direction and therefore the gravity gradient effects will be negligible.

The main forces on the station which are not negligible and affect attitude control are docking, solar radiation pressure, and magnetic field force. The torques due to docking are due to the force imparted on the station from an incoming CEV and the distance of the docking node from the station's center of mass. To calculate the force due to the incoming CEV, an estimate of the fully loaded CEV was taken to be 30,000 kg. The incoming speed of the CEV also had to be estimated. The speed was estimated as equal to the speed that the docking speed of the space shuttle with Mir. The method for docking on Mir was that the space shuttle would proceed at a speed of 0.05 m/s until it was 9 m away from Mir and the hold.[73] After a wait period, the shuttle would continue forward until it was docked. Thus, the docking speed for Space Station Phoenix was estimated as 0.05 m/s. To determine the deceleration of the CEV, it was assumed that the space vehicle will go from 0.05 m/s to a resting dock in 1 s. This gives a deceleration of -.05 $m/s^2$ with a mass of 30,000 kg, for a docking force of 1500 N. The location of the dock will primarily be on the PIRS module. There will also be a docking node on Townhouse A, but the torques imparted from that docking node are not considered. The reason for this is that the secondary docking node on Townhouse A is used only for emergencies and is not in frequent use. Any attitude effects due to a docking at the townhouse would likely be neglected because the astronauts would likely be leaving after an emergency.

[73] "Connecting in Space: Docking with the International Space Station." NASA Virtual Astronaut. 11 May 2006 < http://virtualastronaut.jsc.nasa.gov/teacherportal/pdfs/Connecting%20in%20Space.pdf>.

Solar radiation pressure imparts a constant torque on the station. This force is due to pressure that solar particles impart on the exposed area of the spacecraft. There is also an albedo force which is the reflection of solar radiation from Earth back onto the satellite or station. The solar radiation pressure is directly related to the spacecraft's distance from the sun. The pressure is determined by $p_{SR} = \frac{SF}{c}$ where SF is the solar flux or the solar radiation constant, which varies inversely with the square of the distance from the sun, and c is the speed of light. Once the pressure is known, the force imparted to the station due to the pressure can be determined by $F_{SR} = -p_{SR} * c_R * A_\Theta$ where $c_R$ is the reflectivity of the station and $A_\Theta$ is the exposed area to the sun. The reflectivity is a value between 0.0 and 2.0. This value is extremely difficult to accurately predict, and particularly so for complex bodies with different materials, changing orientations, and eclipse regions. The value is almost always determined once the spacecraft is in orbit through differential correction. In order to be certain that SSP will be able to account for solar radiation pressure, the reflectivity was assumed to be the maximum value of 2.0, although it will likely actually be lower. The albedo reflects approximately 30% of the radiation that the station receives, and that is added to find a total radiation pressure on the station.[74]

The torque imparted to the station is determined from the radiation force and the distance between the station's center of mass and the center of solar radiation. The center of solar radiation is the point that where the pressure on the entire exposed area can be applied as a point force. This value, like the reflectivity, is very difficult to accurately predict. Space Station Phoenix is a relatively symmetrical station, so the distance between the center of mass and center of solar radiation will likely not be that large. To ensure that the estimated torque is at least as high as the estimated torque, a distance of 10% of the full length of the station's axes was assumed. The final value of the solar radiation torque applied to the station is 0.024 N-m about the x-axis, 0.155 N-m about the y-axis, and 0.364 N-m about the z-axis. This torque is applied constantly to the station.

The effects of the magnetic field force must be considered since the station is located inside the Van Allen Belts. Magnetic field force is often used by small satellites as a method of attitude control by utilizing magnetic torquers that impart a torque on the station to rotate it. Space Station Phoenix does not have any magnetic torquers, and thusly the effects of the magnetic field will be relatively minor. The effects will be due to the magnetic force on the structure and equipment inside the station. The magnetic field force is based on the strength of the magnetic field that the station is orbiting through and that field's pull on the station.

The magnetic field alters the attitude of the station through creating an attractive force between the charged particles from any magnetic disturbance. This force is based on the strength of the magnetic field that ionizes the particles and the properties of the materials on the station. Both the strength of the magnetic field and the attractive force are very difficult to determine. There are several magnetic field models to estimate the strength of the field at various altitudes, but without knowing how the materials on the station react to the magnetic field, the actual force can not be accurately determined. However, this force will be relatively small. Therefore, the

[74] Vallado, David. Fundamentals of Astrodynamics and Applications. Second Edition. El Segundo, California: Microcosm Press, 2001.

magnetic field torque was estimated to be slightly larger than the solar radiation torque to ensure that the station would be able to overcome any disturbances. This approximation is sufficient because the solar radiation torque will have a much larger impact on the station's attitude than the magnetic field torque. Ideally the value could be accurately determined through analysis, but the unknown magnetic attraction between the station and the surrounding magnetic field is far too difficult to determine analytically. The final approximation was assumed to be a constant torque of 0.25 N-m in about all three axes.

Magnetic field torque and solar radiation pressure torque act constantly on the station. These perturbations slowly cause the station to move away from its desired orientation. At higher spin rates to simulate higher levels of partial gravity, the perturbations take longer to offset the station. While the station is not spinning at all, the torques cause the station to become misaligned very quickly. Table 7.5.3 shows how quickly the station becomes misaligned for the various partial gravity levels.

Table 7.5.3

| Time to offset station by 2º (days) | Partial gravity level (g) | | | | | |
|---|---|---|---|---|---|---|
| | 0.000 | 0.250 | 0.375 | 0.500 | 0.750 | 1.000 |
| x-axis | 0.063 | 33755 | 41341 | 47736 | 58465 | 67509 |
| y-axis | 0.19 | 16 | 19 | 22 | 27 | 31 |
| z-axis | 0.39 | n/a | n/a | n/a | n/a | n/a |

As shown in Table 7.5.3, far more realignments are necessary when the station is not spinning. This is due to the high angular momentum that the station has while it is spinning, as well as the fact that attitude must be maintained about 3 axes when not spinning as opposed to only the x- and y-axes when the station is spinning. Fortunately, much less propellant mass is required to reorient the station while it is not spinning, but overall more propellant is needed per year while not spinning due to the very high number of reorientations that are necessary.

The station will be reoriented whenever it becomes perturbed by more than 2° and also after each docking maneuver. The solar arrays can be misaligned by up to 10º, but 2º was chosen to ensure that the station would remain in the correct alignment as often as possible. This will help to improve the communications and solar array efficiency. Any value under 10º could be chosen and the overall mass propellant will remain the same, since the thrusters are firing at their maximum thrust. For example five reorientations of 2º requires the same amount of propellant as one reorientation of 10º. This is shown in Table 7.5.4.

Table 7.5.4

| | Station Artificial Gravity (g) | | | | |
|---|---|---|---|---|---|
| Angle to Adjust (deg) | 0.25 | 0.375 | 0.5 | 0.75 | 1 |
| 1 | 0.21 | 0.26 | 0.30 | 0.37 | 0.43 |
| 2 | 0.43 | 0.52 | 0.61 | 0.74 | 0.86 |
| 3 | 0.64 | 0.79 | 0.91 | 1.11 | 1.29 |
| 4 | 0.86 | 1.05 | 1.21 | 1.48 | 1.71 |
| 5 | 1.07 | 1.31 | 1.51 | 1.86 | 2.14 |
| 6 | 1.29 | 1.57 | 1.82 | 2.23 | 2.57 |
| 7 | 1.50 | 1.84 | 2.12 | 2.60 | 3.00 |
| 8 | 1.71 | 2.10 | 2.42 | 2.97 | 3.43 |
| 9 | 1.93 | 2.36 | 2.73 | 3.34 | 3.86 |
| 10 | 2.14 | 2.62 | 3.03 | 3.71 | 4.28 |

The station will also be reoriented after each dock.

The reason for reorienting immediately following a dock is that the offset due to the dock is known. Also, during docking when the station is not spinning, the deflection about the z-axis is more than 10º and needs to be reoriented. Since the docking torque is the same regardless of what the spin rate is, the propellant mass needed to realign the station following a dock is the same for any spin rate. It requires less propellant mass to reorient the station following a dock when the station is not spinning since there is no angular momentum to overcome.

The total propellant mass was determined by finding the total number or realignments that will be required and multiplying them by the propellant mass for each realignment. The propellant mass that is burned during docking was also added to find the total mass for the duration of the mission. Table 7.5.5 shows the xenon mass that is burned per year to overcome the perturbations as well as the mass burned following each dock.

Table 7.5.5

| | Non-spinning | Spinning |
|---|---|---|
| Xenon mass for perturbations (kg/yr) | 3010 | 183 |
| Xenon mass for docking (kg/dock) | 0.14 | 0.26 |

## 7.6 Docking Stability (Mackey)

Space Station Phoenix is stable within acceptable margins for normal operation. However, the level of instability is too high for docking maneuvers. In order to stabilize the station during docking, a high level of torque must be applied to the station just prior to docking and lasting through the entire docking procedure. These high torques are only necessary during docking maneuvers while the station is spinning. The high level of torque required makes the electric thrusters that are used for spin-up and attitude control insufficient. Rather than launch a new thruster package to account for this instability, Space Station Phoenix will reuse the US Reaction Control thrusters that are already on ISS.[75]

The thrusters being reused are Kaiser Marquardt R-4D thrusters that produce a thrust of 490 N. These bipropellant thrusters use $N_2O_4$ and UDMH for propellant. Since the thrusters are not throttleable, and the torque required for stability needs to be precise, the thrusters will be placed along the x-axis at specific locations. These locations relate to the torque needed and the constant thrust produced by the thruster. The locations will be symmetrical on both sides and both thrusters will be fired. The distances along the x-axis are 8.16 m, 12.24 m, 16.33 m, and 22.45 m for 0.25 g, 0.375 g, 0.50 g, and 1.0g, respectively. The propellant required for to stabilize the station during all of the spinning docks is 375 kg, 242 kg of $N_2O_4$ and 133 kg of UDMH.[76]

[75] "Mission Operations Directorate." International Space Station Familiarization Manual. 31 July 1998. NASA. 11 May 2006 <http://vesuvius.jsc.nasa.gov/er/seh/td9702.pdf>.

[76] Jorgensen, Catherine. "International Space Station Evolution Data Book." October 2000. NASA. 11 May 2006 <http://www.asi.org/adb/11/iss/NASA-2000-sp6109vol1rev1.pdf>.

## 7.7 Gravity Simulation (Falini)

SSP must be capable of producing artificial gravity in order to simulate a manned mission to Mars. Each design of SSP relied on spinning the station about an axis. This spinning creates a centrifugal force in the plane of rotation, simulating gravity. Finding the best way to spin SSP was critical to the success of the project. The general idea was to use some sort of thruster system to create moments about the spin-axis. Placing the thrusters on the outside edge of the station would create the maximum moment. Figuring out which thruster was best suited for spinning SSP was the next step.

A very important trade study, comparing different types of electrical thrusters and chemical thrusters, was done to determine which thruster would be best suited for spinning SSP. Tables 7.7.1 and 7.7.2 show the types of electrical thrusters compared, and common chemical thruster combinations.

Table 7.7.1

| Thruster Type | Isp(s) | Thrust(N) | Power Req(W) |
|---|---|---|---|
| Resisto Jet | 300 | 0.5 | 1000 |
| Arcjet | 500 | 0.25 | 2000 |
| Ion | 3000 | 0.015 | 3000 |
| Hall | 1500 | 0.04 | 5000 |
| T-220HT | 2500 | 12 | 20000 |
| NASA-457M | 2929 | 2.95 | 73201 |

Table 7.7.2

| Fuel | Oxidizer | Isp |
|---|---|---|
| H2 | O2 | 360 |
| H2 | F2 | 390 |
| N2H4 | O2 | 265 |
| N2H4 | F2 | 290 |
| N2H4 | H2O2 | 255 |
| N2H4 | H2O4 | 250 |
| N2H4 | RFNA | 247 |
| Kerosene | O2 | 240 |
| UDMH | O2 | 240 |
| UDMH | RFNA | 241 |
| UDMH | WFNA | 240 |

The favorable qualities for electric thrusters are high specific impulse ($I_{sp}$), high thrust, and low required power. A chemical propulsion system with a high Isp has the advantages that thrust can be customized based on engine characteristics and that minimal power is required for a chemical propulsion system. The most important quality for both types of thrusters is required propellant mass. Mass drives the overall cost of the system because of launch costs, so a low required mass is wanted. Because SSP has a very large moment of inertia, a proportionately high impulse is required to spin SSP at the desired rate. This means that a thruster with a high $I_{sp}$ will require significantly less propellant. The following equation relates the required propellant mass to the Isp of the thruster for SSP.

$$m = \frac{\Delta\omega * I}{I_{sp} * g_0 * D}$$

Where ***m*** is the required propellant mass, ***Δω*** is the change in angular velocity, ***I*** is the moment of inertia about the spin-axis, ***Isp*** is the specific impulse, $\mathbf{g_0}$ is the gravitational constant, and **D** is the distance from the axis of rotation to the thruster. Using the chemical combination with the highest $I_{sp,}$ SSP would require a propellant mass of approximately 6,200 kg. The mass needed for an electrical propulsion system with an Isp of 1,500 s is about 1,500 kg. This is less than 25% of the mass needed for the chemical propulsion system. After selecting to use an electrical thruster, the specific thruster needed to be chosen.

A trade study comparing the individual thrusters was completed to determine the particular thruster. These thrusters were compared by thrust, required power, and required propellant mass. A high thrust means the station could be spun faster, a lower required power means less power needs to be drawn from the solar arrays, and a lower propellant mass significantly reduces cost. With these three parameters, the T-220HT is an easy choice. It has the second highest $I_{sp}$, at 2,500 s[77], which requires 900 kg of propellant to spin SSP. It also provides the most thrust, up to 13.2 N, and requires, at most, 22 kW of power[77]. The only other potential choice is the NASA-457M. Since the 457M only provides 3 N of thrust using 73 kW of power[78], four times as many thrusters would be needed to match the thrust of the T-220HT. This would result in an incredibly large power draw, about 300 kW.

The T-220HT is a Hall-Effect thruster created by Pratt & Whitney. Each thruster weighs about 50 kg, including the propellant delivery system. The T-220HT uses liquid xenon as the propellant, and produces thrust at 0.6 N/kW of input power[79]. The thruster is rated to 22 kW, but is used at a maximum of 20 kW on SSP, producing 12 N of thrust. The thruster produces an exhaust plume with a 28° half-angle[79]. During experimental tests, this plume was measured to have a temperature less than 200 °C at one meter from the thruster exit[79]. This means that the plume will not significantly affect parts of SSP. The T-220HT operates at a high thrust relative to other electrical thrusters, but is very low considering the mass of SSP.

A goal for spinning SSP is the ability to reach the desired spin rates in a reasonable time. In this case, a time on the order of one day is preferable. Module floors on SSP are 47.5 m from the axis of rotation. To simulate 1g, these floors must rotate at 4.34 rpm. To achieve the desired spin rates in the time frames planned, SSP must use four T-220HTs to spin-up and spin-down. The following equation provides the time needed to change the spin rate on SSP.

$$t = \frac{\Delta\omega * I}{T * D * 2}$$

Where ***t*** is the time, ***Δω*** is the change in angular velocity, ***I*** is the moment of inertia about the spin-axis, ***T*** is the thrust at each location, and **D** is the distance from the axis of rotation to the thruster. The ***2*** represents the number of locations where the thrust ***T*** is being applied. Table 7.7.3 shows how long it takes SSP to reach each gravity level.

Table 7.7.3

| Desired Gravity | Current Gravity | Time Required (hours) |
|---|---|---|
| 3/8g | 0g | 20.2 |
| 1/4g | 0g | 16.5 |
| 1/2g | 1/4g | 6.8 |
| 3/4g | 1/2g | 5.3 |
| 0g | 3/4g | 28.6 |

[77] Hruby, Vlad. "Review of Electric Propulsion Activities in the US Industry." AIAA 4441(2003):
[78] Manzella, David, Robert Jankovsky, and Richard Hofer. "Laboratory Model 50 kW Hall Thruster." AIAA 3676(2002):
[79] McVey, John, Edward Britt, Scott F. Engelman, and Frank S. Gulczinski. "Characteristics of the T-220HT Hall-Effect Thruster." AIAA. 5158(2003):

Deciding where to place these thrusters was a relatively simple decision. Given that the thrusters will have a greater effect the farther they are from the station centroid, the thrusters must be placed on the outside of each town house section. The thrusters need to be symmetrically mounted to ensure that translational forces are canceled, and only moments are produced. To accomplish this, two identical packages, including four thrusters, the propellant delivery systems, and the propellant tanks, will be used. One package will be mounted on node 3B and the other on node 3C. Mounting the packages on these nodes provides structural support. More importantly, this allows the packages to be mounted on earth before the nodes are launched instead of requiring an EVA.

## 7.8 Orbital Maintenance

### *7.8.1 Drag (Marquart)*

Due to its relatively low altitude (336-348 km), the orbit of the Space Station Phoenix is still affected by the atmosphere of the earth. The atmosphere induces a drag force on the station, which slows its tangential velocity and causes it to fall out of orbit. The following derivation for the $\Delta V$ required to maintain the orbit comes from [80].[80] The deceleration due to drag, $a_D$, is determined by:

$$a_D = -\frac{1}{2}\rho\left(\frac{C_D A}{m}\right)V^2$$

where $\rho$ is the atmospheric density, $C_D$ is the drag coefficient, $A$ is the cross-sectional area orthogonal to the velocity, $m$ is the mass, and $V$ is the orbital velocity. The term $\left(\frac{C_D A}{m}\right)$ is the inverse of the ballistic coefficient. Under the assumption of a circular orbit, the change in orbital altitude per revolution due to drag is:

$$\Delta a_{rev} = -2\pi\left(\frac{C_D A}{m}\right)\rho a^2$$

where $a$ is the semi-major axis. For a circular orbit, the semi-major axis is also the orbital radius. This equation can be manipulated to yield the $\Delta V$ required to maintain the orbit for each revolution:

$$\boxed{\Delta V_{rev} = \pi\left(\frac{C_D A}{m}\right)\rho a V}.$$

In order to use this analysis, certain properties of SSP and its orbit must be obtained. Though SSP will have a slightly eccentric orbit, the drag analysis become much more complex when the orbit is not circular. Therefore, the orbit will be assumed constant at an altitude of 342 km, or ***a***

[80] Larson, Wiley J., Wertz, James R., eds. *Space Mission Analysis and Design, 3rd Edition*. El Segundo, California: Microcosm Press, 1999.

= **6720 km**. The orbital velocity of SSP is obtained from $V = \sqrt{\frac{\mu}{a}}$, where $\mu$ is the gravitational parameter given by $\mu = 398600.4\ \text{km}^2/\text{s}^3$. The estimated orbital velocity of SSP is $\boldsymbol{V}$ **= 7.70 km/s**.

The density of the atmosphere varies based on the state of the space environment. Specifically, at a solar maximum the density is much higher than at a solar minimum. The following model was used for the atmospheric density at an altitude of 350 km: [80]

Table 7.8.1. Atmospheric density at 350 km altitude

| Space Environment | Atmospheric Density (kg/m$^3$) |
|---|---|
| Solar Minimum | $2.34 \times 10^{-12}$ |
| Solar Maximum | $16.6 \times 10^{-12}$ |
| Average | $6.98 \times 10^{-12}$ |

The mass of the fully loaded SSP is $\boldsymbol{m}$ **= 545,000 kg**.

Determining the drag coefficient for SSP is difficult without an actual model to test in a wind tunnel. Therefore, the drag coefficient is assumed to be similar to that of the ISS, or $C_D$ **=2.00**. [81]

In order to account for the worst case scenario, the surface area orthogonal to the velocity is modeled using the approximate maximum dimensions of the station, 96 m x 47 m. This is a high order estimate; the actual surface area will be smaller, but is difficult to compute for SSP due to its complexity. This assumption gives $\boldsymbol{A}$ **= 4512 m$^2$**.

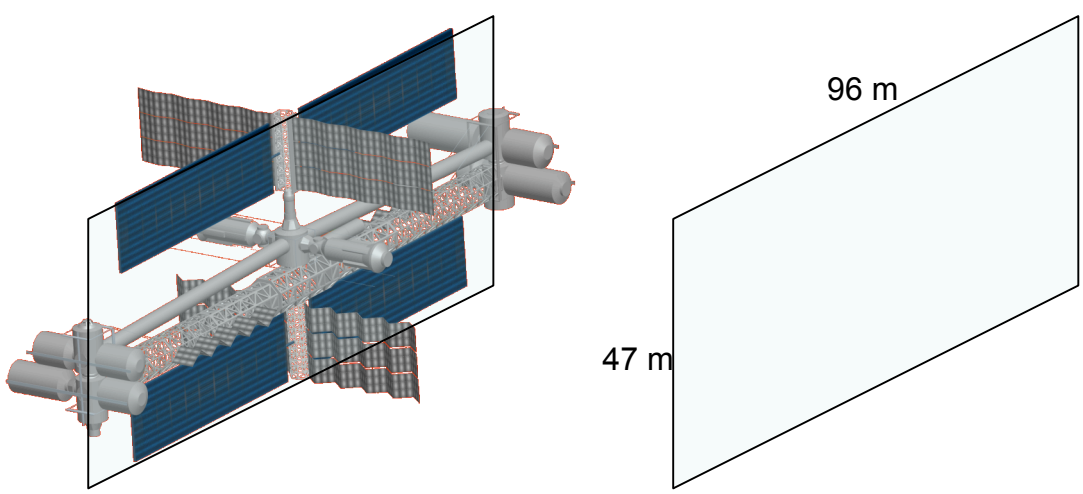


**Fig. 7.8.1: Approximate Maximum Surface Area for SSP**

[81] Author Unknown. "ISS Trajectory Data." 2 Jan. 2004. NASA: Human Space Flight, Real-Time Data. 14 April 2006. <http://spaceflight.nasa.gov/realdata/sightings/SSapplications/Post/JavaSSOP/ orbit/ISS/SVPOST.html>

The corresponding ballistic coefficient for SSP is $\left(\frac{m}{C_D A}\right) = 60.4$.

With all of the required variables, the $\Delta V$ required (per revolution) can be determined. Dividing by the orbital period in terms of years, ***P* = 1.74 x 10$^{-4}$ years**, the annual $\Delta V$ required for the orbital maintenance of SSP can be determined as:

**Table 7.8.2. Drag maintenance Δv requirements**

| Space Environment | Annual Δv Required (m/s) |
|---|---|
| Solar Minimum | 36 |
| Solar Maximum | 257 |
| **Average** | **108** |

### *7.8.2 Orbit Precession (Marquart)*

Drag is not the only perturbation to have an affect on the orbit of the SSP. The earth is not a perfect sphere, and as a result, the two-body equations of motion need some adjustment. At a low orbital altitude, the J2 perturbations, which account for the actual shape of the earth, contribute significantly to the variation of the right ascension of the ascending node, $\Omega$, and the argument of perigee, $\omega$. The equations for the rate of change of these elements are:[80]

$$\dot{\Omega} = \left(-2.06474 \times 10^{14}\right) a^{-\frac{7}{2}} \cos i$$

$$\dot{\omega} = \left(1.03237 \times 10^{14}\right) a^{-\frac{7}{2}} \left(4 - 5\sin^2 i\right)$$

where $i$ is the inclination of the orbit. Assuming $a$ = 6720 km in a circular orbit as before, and using $i$ = 51.6º, these values can be computed as

$$\dot{\Omega} = -5.2°/\text{day}$$

$$\dot{\omega} = 3.9°/\text{day}$$

Though the J2 perturbations do affect the orbital elements of the station, keeping the station in a precise orbit is not required. The precession of the orbit about the earth is not a problem, and therefore, no $\Delta V$ is required to adjust for it.

### *7.8.3 Orbital Maintenance (Falini)*

SSP significantly affected by atmospheric drag because it is in low earth orbit. SSP loses 107.7 m/s of velocity per year, on average. This change in velocity must be countered to assure SSP remains in the proper orbit.

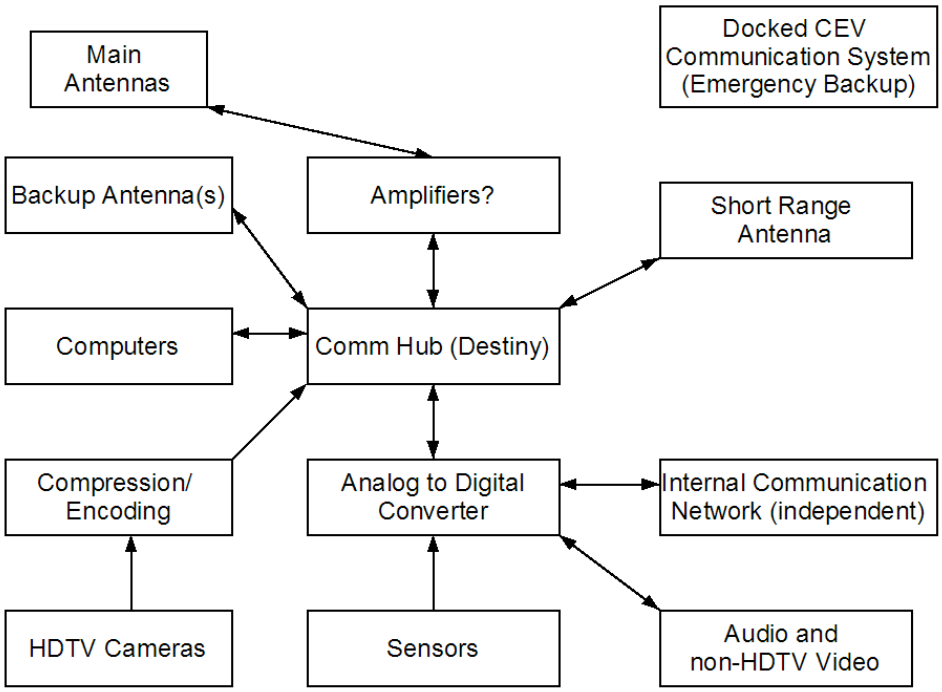


1

The central axis of SSP holds ten T-220HT thrusters. On each end of the central axis there are five thrusters, two in the y-direction, two in the x-direction, and one in the outward z-direction. These thrusters are used to control the attitude of SSP while in orbit. These same thrusters are used for orbit maintenance purposes. Having this system of thrusters provide attitude control and orbit maintenance is very convenient. It reduces cost by requiring less mass than if separate thrusters were used.

Since the T-220HT produces a relatively low thrust, orbit maintenance can not be done in short bursts. To solve this problem, SSP's orbit will be maintained continuously. To counteract the loss due to drag a continuous force of 1.74 N must be applied to SSP. The thrusters on the central axis will provide this force. This force must be split between the thrusters on the top end and thrusters on the bottom end of the central axis to ensure there is no moment created. Orbit maintenance will require a constant 3 kW of power. Orbit maintenance will require a significant amount of liquid xenon propellant. Using the rocket equation, it will require almost 14,000 kg of liquid xenon to maintain the orbit of SSP for the duration of the mission.

## 7.9 Propellant (Falini)

Liquid xenon is the main propellant used on SSP. It is used for spinning, orbit maintenance, and attitude control. SSP requires 24,600 kg of xenon, including a 30% margin, for these purposes. Table 7.9.1 shows the breakdown of xenon mass use on SSP.

All of the tanks will store the xenon at 900 psi, or about 6.2 MPa. At this pressure xenon will remain a liquid at room temperature and higher. Aluminum was chosen as the tank material, because of its low density and its use in many other space applications. The aluminum has a yield-strength of 180 MPa. Since the density of liquid xenon is quite large, 3057 $kg/m^3$, the tanks are manageable in size.

| Table 7.9.1 | |
|---|---|
| Spinning | 900 kg |
| Attitude Control | 6000 kg |
| Orbit Maintenance | 17700 kg |
| Docking | 2 kg |
| Total | 24,600 kg |

Two propellant tanks are needed to store the liquid xenon that is required for spinning SSP. After calculating the required propellant mass, the volume is can be determined, and the tanks designed. Using a cylindrical tank with hemispherical end caps and a safety factor of two, each tank's required mass is about 65 kg. Each tank is 0.4 m in diameter with a cylindrical height of 0.9 m and a thickness of 1.4 cm. Each tank holds approximately 450 kg of xenon.

There are two other tanks that hold liquid xenon on SSP. These tanks are located on the top and bottom of the central axis. These tanks are equal in mass and volume since they each hold half of the remaining xenon. These tanks each hold 11,850 kg of xenon and weigh 1,700 kg themselves. These tanks are also cylindrical tanks with hemispherical end caps, and are designed using a safety factor of two. Each tank is 0.55 m in radius with a cylindrical height of 3.34 m and a thickness of 3.8 cm. This tank is tall, but the radius is the more important dimension. The radius is kept small incase an astronaut needs to put his or her arms around tank. A smaller radius also reduces the mass of the tank. The mass is reduced because the tank does not need to be as thick since the hoop stress is reduced.

## 7.10 Radiation (Hendrickson)

### *7.10.1 Radiation Sources*

There are three major sources for radiation in space, trapped radiation, GCR, and SPEs. Trapped radiation includes regions of electrons and protons which have become trapped in the earth's magnetic field. These regions are called the Van Allen belts. The SAA is a region above Earth where the Van Allen belts extend much closer to Earth than normal and effects LEOs with inclinations above 30˚. GCR consists of high energy particles originating from outside our solar system which provide a constant source of radiation. GCR includes a relatively high percentage (~2%)[82] of heavy nuclei which can be very damaging to living tissue. GCR is at its maximum during solar minimum and at its minimum during solar maximum. SPEs are large radiation spikes from the Sun during CMEs and solar flares. SPEs are most frequent during solar maximum and least frequent during solar minimum.

Table 7.10.1. LEO Exposure Limits83

| | BFO (Sv) | Eye (Sv) | Skin (Sv) |
|---|---|---|---|
| Career | --- | 4.0 | 6.0 |
| 1 year | 0.50 | 2.0 | 3.0 |
| 30 day | 0.25 | 1.0 | 1.5 |

The radiation from GCR and SPEs in deep space is too severe to properly shield ISS against it while still meeting the budget constraints (see Appendix C.1). As a result SSP will remain in ISS' orbit. Within this environment the protection of Earth's magnetic field greatly reduces the exposure from GCR and SPEs, however the SAA is a large contributor to exposure rates.

The current radiation exposure rate on ISS is approximately 0.3 Sv/year[83]. This is well below the LEO exposure limits. Since the inhabited modules of SSP will be made largely out of ISS modules and SSP will be at the same orbit, no additional radiation shielding is required and the exposure rates on SSP should be similar. Age limitations will have to be set based on gender when selecting the crew for the three year Mars simulation mission to ensure career exposure limits are not exceeded. Given the ISS exposure rates males under 35 and females under 45 would be ineligible.

Table 7.10.2. Career LEO Exposure Limits83

| Age (year) | Male (Sv) | Female (Sv) |
|---|---|---|
| 25 | 0.7 | 0.4 |
| 35 | 1.0 | 0.6 |
| 45 | 1.5 | 0.9 |
| 55 | 3.0 | 1.7 |

[82] NASA Standard 3000: Man-Systems Integration Standards, Revision B, July 1995. http://msis.jsc.nasa.gov/.

[83] NCRP (2000) National Council on Radiation Protection and Measurements. *Radiation Protection Guidance for Activities in Low-Earth Orbit*, NCRP Report No. 132 (National Council on Radiation Protection and Measurements, Bethesda, Maryland).

# VIII. Science

## 8.1 Variable Gravity Testing (Khoury)

### *8.1.1 VGT Timeline Constraints*

As dictated by level 1 requirement five, "SSP shall be used to quantify the effects of variable gravity on human physiology to allow the design of Mars transit vehicles by Jan. 1, 2024." Variable gravity has been interpreted as multiple gravity levels other than those experienced by humans, more specifically, levels other than 0 and 1g. The importance of this requirement is to determine what level of gravity and corresponding exercise regiment is necessary to maintain bone and muscle mass. If, for example, astronauts could maintain their mass with an exercise routine of 2 hours daily at ¼ g, it would be reasonable to use this level of artificial gravity for transfer vehicles. However, if this gravity level required a heavy exercise routine to merely slow bone and muscle mass loss, it would be unreasonable to use such artificial gravity for transfer vehicles. Therefore, under this interpretation, it is necessary to test several gravity levels, the more the better, in order to clearly understand the effects of partial gravity on the human body.

Unfortunately, other constraints, some defined by the Lv. 1 requirements, minimize the amount of variable gravity testing conducted on SSP. For one, the overall timeline allots only 10 years for the entire project, including construction, variable gravity testing, and the Mars mission simulation (Lv.1 requirement 4). The construction time, according to the construction analysis, is approximately 4.5 years which will be completed before August 2021. The problem then becomes constrained from Lv.1 requirement 5 since variable gravity testing (VGT) must be completed by Jan. 1 2024. Furthermore, an approximate time of 3 years must be allotted for the MMS phase of SSP, which must be completed before 2027. As a result, VGT will take place between the end of the construction phase in July 2021 and the deadline of Jan. 1, 2024. This only allots 2.5 years for VGT.

Another prime constraint for VGT is the budget. Of course the total budget is $20B (Lv.1 requirement 13) and nominal operating costs must be less than $1B per year (Lv.1 requirement 12). After construction, 50% of the budget is absorbed and with a 30 % cost margin only $4B can be provided for nominal operating costs. Since every crew transfer costs $300M and ground control costs $177M, there is possible room for more than one crew transfer per year. However, the 30 % cost margin set by the Systems Integration team would not be met and therefore, more crew transfers should be avoided. Under these constraints, three crew transfers are possible since the previous crew swap would occur in the year 2020 during the construction phase. As a result, only three variable gravity experiments can be conducted from July 2021 to December 2024 if a fresh crew is desired for each test.

The advantage of a fresh crew for each test over a single crew performing multiple tests is inherent in the untested territory of partial gravity. Astronauts subjected to microgravity for months must endure weeks and even months of rehabilitation after they return to earth. Subjecting astronauts to multiple gravity levels with intense exercise regiments over the course of a year might produce unfavorable and unanticipated results. On top of this, the current

reference mission calls for a Mars mission where astronauts are never subjected to gradually changing gravity levels. Instead, a Mars crew would be subjected to constant levels of gravity at 1, 0, and 3/8g for long periods[84]. Since this is the current plant for a Mars Mission, there is no need to subject the crew to multiple gravity levels during their tour of duty on SSP.

### *8.1.2 VGT Timeline*

VGT mission profile that results from these constraints consists of testing humans at ¼, ½, and ¾ g of approximately 10 months per crew. These levels of gravity were chosen for two reasons: human beings have not experienced such gravity levels for long periods in the past, and the levels are evenly spread between 0 and 1g to test SSP's operability in lower and higher gravity regions. Long term exposure in 0 and 1g is avoided during VGT since much experimentation has been devoted to these levels already. It was a goal to provide the crew with a necessary amount time prior to each gravity experiment so 1 week is currently allotted for transfer, docking, and re-supply.

Table 8.1.1: Variable Gravity Experimentation Timeline

| Date | Phase | Duration | Gravity (g) |
|---|---|---|---|
| July 1, 2021 | Crew Transfer | 1 week | 0 |
| July 8, 2021 | Spin up | 13 hours | 0→ ¼ |
| July 8, 2021 | G exp. 1 | 10 months | ¼ |
| May 8, 2022 | Crew Transfer | 1 week | ¼ |
| May 15, 2022 | Spin Up | 5.5 hours | ¼ → ½ |
| May 15, 2022 | G exp. 2 | 10 months | ½ |
| Mar. 15, 2023 | Crew transfer | 1 week | ½ |
| Mar. 22, 2023 | Spin up | 4 hours | ½ → ¾ |
| Mar. 22, 2023 | G exp. 3 | 9 months | ¾ |
| Dec. 22, 2023 | Spin Down | 22 hours | ¾ → 0 |
| Dec. 22, 2023 | Crew Transfer | >1 week | 0 |

[84] Stephen J. Hoffman and David I. Kaplan, eds., Human Exploration of Mars: The Reference Mission of the NASA Mars Exploration Study Team - NASA SP-6107 - NASA Johnson Space Center, July 1997

Every year from 2021 to 2024, a fresh crew will experience the somewhat long-term effects of partial gravity. The 10 month experiments, although long, are still much less then the maximum continuous experience in microgravity of 14 months experienced by Dr. Valeri Polyakov[85]. Assuming some partial gravity can maintain bone and muscle mass, the long-term effects should be far less detrimental then in microgravity. Ultimately, these experiments are conducted to confirm such assumptions regarding the necessary level of gravity not only for the astronauts to function but, also for them to maintain bone and muscle mass. The entire VGT phase will be completed before Jan. 1 2024 and therefore meeting Lv.1 requirement 4.

## 8.2 Mars Mission Simulation (Khoury)

As defined by Lv.1 requirement 5, "The science goal for SSP is to safely simulate a full-duration mission to Mars by Jan. 1, 2027." In order to properly simulate a mission Mars, spinning SSP at 3/8g is a key requirement. The current reference mission calls for 0g transfer phases in which the crew will be subjected to microgravity during transfer, 3/8g on the Martian surface, and microgravity during the return phase. Although artificial gravity was considered for the transfer phases to and from Mars, the NASA reference team assumed construction of vehicles capable of AG would be too expensive. Therefore, it is assumed that a mission to Mars would not utilize AG during the transfer and return phases[86]. Obviously, the 0g transfer phases are something that can be best simulated using SSP's generation of artificial gravity.

### *8.2.1 MMS Timeline Options (Khoury)*

Currently, there are three major timeline profiles derived from various transfers to and from Mars. The short-stay option consists of a 7.5-month transit phase, 1 month on the Martian surface, and a 10 month return phase. The disadvantages of the short-stay option are apparent. For one, the crew would only spend 1 month being subjected to Martian gravity. Since the effects of Martian, gravity on humans is unknown and the effects of a 7.5-month transit phase can be highly detrimental to bone/muscle mass, the possibility of the astronauts being incapable of performing mission goals on the Martian surface in only 1 month is high.

Another key disadvantage to the short-stay option is the relatively long time spent in microgravity. For the purpose of SSP, subjecting the crew to microgravity for such a long time and 3/8g for such a short time is not recommended to achieve the mission goals. The station is designed to perform at gravity levels from 0 to 1g and letting it idle for such a long time does not maximize the Martian g experimentation that could be conducted. In other words, this option requires high risk and cost with a low experimentation yield. The only observable advantage of this option is the overall short mission time of less than 2 years providing a significant amount of time for research to be conducted post-MMS.

---

[85] "Canadian Astronaut Office - FAQs." Canadian Space Agency. 8 Jan. 2005. 26 Apr. 2006 <http://www.space.gc.ca/asc/eng/astronauts/faq.asp#9>

[86] Stephen J. Hoffman and David I. Kaplan, eds., Human Exploration of Mars: The Reference Mission of the NASA Mars Exploration Study Team - NASA SP-6107 - NASA Johnson Space Center, July 1997

The second option considered is the long-stay option which consists of a 7.5 transit, 15 months on the Mars phase and an 8 month return phase. Compared to the short-stay option, this option is an improvement in terms of utilizing Martian gravity experimentation. The 15 month Martian gravity phase ensures that the crew should have enough time to become acclimated to the new gravity level since ISS crews have recovered from the long-term effects of microgravity within 2 months. This option is significantly longer, just under 3 years, and does not provide enough open space in the timeline to account for launch failures, delays, etc.

The third option is the fast-transit option which consists of a 5 month transit phase, 21 month Mars phase and a 4 month return phase. This option maximizes the amount of time spent at Mars gravity while minimizing the amount of time spent in microgravity. Not only is this advantageous for SSP mission goals but it is possibly safer for the crew since it potentially provides an environment for them to maintain their bone and muscle mass. Furthermore, the time spent in microgravity is comparable to typical tours of duty on the ISS.

Figure 8.2.1, shown below to the right, shows the key differences between these timeline options, namely the overall advantages of the fast-transit option over the short stay and long stay options[87]. It is clear, that the fast-transit option has the largest overall Mars gravity phase, shortest transfer phases, and overall second shortest length.

Figure 8.2.1. MMS Timeline Options

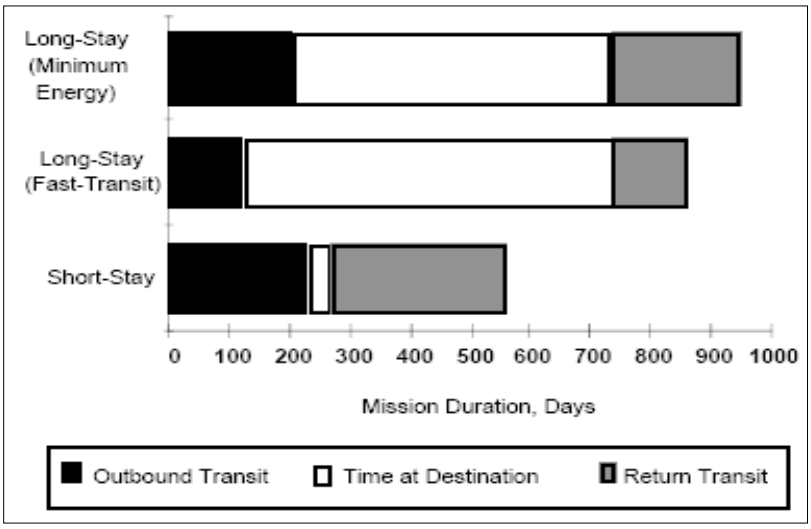


After reviewing these timeline options, it is apparent that the fast-transit option would best suit the mission goals of SSP. Using this option, the entire MMS can be completed in 2.5 years, leaving about 5 months for potential mission delays.

The MMS commences in February 2024, after the completion of VGT and a one-month preparation in January. It should be noted that the spin- up and spin-down times for VGT and MMS were provided by the propulsion analysis. Although these times are somewhat long compared to the near instantaneous effects of landing on Mars, they are relatively quick compared to the overall length of the mission.

[87] Stephen J. Hoffman and David I. Kaplan, eds., Human Exploration of Mars: The Reference Mission of the NASA Mars Exploration Study Team - NASA SP-6107 - NASA Johnson Space Center, July 1997

Table 8.2.1: Mars Mission Simulation Timeline

| Date | Phase | Duration | Gravity (g) |
|---|---|---|---|
| Feb. 1, 2024 | Transfer Phase | 5 months | 0 |
| July 1, 2024 | Spin-Up | 16 hours | 0 → 3/8 |
| July 1, 2024 | Mars Gravity phase | 21 months | 3/8 |
| Apr. 1, 2026 | Spin-Down | 16 hours | 3/8 → 0 |
| Apr. 1, 2026 | Return Phase | 4 months | 0 |
| Aug. 1, 2026 | Mission Complete | ---------- | ---------- |

Using this timeline, some of the station preparation and calibration can be completed during the first 5-month transfer phase where the crew will be unable to perform Mars related experiments. The 1-week transfers to and from the station are incorporated into the transfer and return phases of the MMS to save on overall mission time. This is reasonable considering that the current plan assumes 0g transfer and return phases of the mission. The MMS will be completed in August of 2026, roughly 5 months prior to the deadline of Jan. 1 2024 set by Lv.1 requirement 4.

The CEV will be used for emergency evacuation (Lv.1 requirement 2) but, according to the Power and Propulsion team, it must be replaced every year to make sure that the fuel has not boiled off, rendering it useless. In order to comply with this requirement but, also perform a MMS "without re-supply," this CEV replacement is not interpreted as MMS re-supply. Therefore, no re-supply of essentials for the MMS will take place, only the CEV will be replaced annually to insure evacuation will be available at all times.

### *8.2.2 Martian Day Simulation (Khoury)*

To further explore the difficulties of performing a Mars mission, the Martian day should be included in the simulation. The Martian day is approximately 40 minutes longer the average Earth day. This should be accounted for by either including a time lapse in the day's schedule, possibly during sleep hours, or adding an extra two minutes onto every hour of the day to keep the Mars schedule in line with the ground crew schedule. It would be best to allot the extra 40 minutes for sleep/exercise/leisure time to accommodate for the needs of the crew[88]. It also would be advantageous to simulate the corresponding real Martian day by turning lights on and off in the station to simulate sunrise and sunset.

### *8.2.3 Mars Mission Simulation (Needham)*

"SSP shall be capable of a 3-year simulation of a Mars mission without resupply, including EVA and emergency operations." This is the number one requirement in the Level 1 requirements

[88] "Timekeeping on Mars." Wikipedia, the Free Encyclopedia 21 Apr. 2006. Wikimedia Foundation, Inc. 29 Apr. 2006. <http://en.wikipedia.org/wiki/Timekeeping_on_Mars>

provided at the beginning of the semester. To prepare the crew for a real Mars mission was the driving force behind the design of the station and the planning of the crew's day to day activities.

An Earth day lasts 24 hours and a Martian sol lasts 1.03 Earth days, or 24 hours and 40 minutes. Therefore, to prepare the crew for this change, they will operate on a Mars sol rather than an Earth day. Although this is a very small difference in time, the psychological and physiological effects will be studied to see if this extra 40 minutes a day has an effect on the crew over a period of 3 years.

During a manned mission to Mars, there will be no direct communications between the crew on Mars' surface and the ground control on Earth. Therefore, to simulate a real Mars mission, there will be no direct communication between the SSP and control for the duration of the mission unless an emergency arises, in which case all delays will be turned off. Because SSP simulates transit to and from Mars, as well as a stay on the surface, the communications will cooperate with this simulation. As the distance between SSP and Earth grows, the delay will increase. It will be the greatest during the Mars surface simulation, where there will be no direct contact at all between the crew and control and most contact will be in the form of email and voice-mail. Similarly, as the station simulates the return trip, the delay will then decrease. This training tool will provide the psychological effects that a delay in communication will have on the crew.

Another way to psychologically prepare the crew for a mission to Mars is to place video monitors around the station that show the Earth diminishing and Mars growing in size. These monitors will also be synchronized with the mission time line. The size of Earth will decrease as the transit period increases, and the station "approaches" Mars, with Earth being its smallest, a speck, during the Mars simulation. Likewise, it will increase in size as the station returns to Earth. The same will occur with Mars. Mars will increase in size as the station approaches, and decrease as the station departs.

One of the many reasons why a human has not ventured to Mars yet is due to the amount of radiation they would experience in transit as well as while on Mars' surface. Because Mars has such a thin atmosphere, it is more susceptible to space radiation and solar flares than Earth is. One of the hazards of performing an EVA on Mars will be the solar flares. Although the technology is available to detect an oncoming flare, it is still a frightening experience, especially if the alarm sounds while a crew member is on an EVA. Therefore, the SSP will be equipped with the technology to warn the crew of an oncoming solar flare and its intensity. This will allow them to mentally prepare so that when the alarm sounds they will not panic if the situation were to arise while on an EVA.

### *8.2.4 Mars EVA Simulation (Needham)*

The main goal of the Mars EVA simulation is to prepare the crew for EVAs that will take place on Mars' surface. This includes having every member of the crew suit up in a full Mars EVA suit and perform tasks that will enable them to work proficiently while on Mars.

The Mars EVA simulation will take place in the Columbus module which is located in Townhouse B. This module will be fully equipped with all tools necessary for a successful EVA

simulation. Each day, two crew members will suit up in a full Mars EVA suit for a period of seven hours, resulting in about 14 hours of EVA time a week for each crew member.

The module will be equipped with a treadmill and virtual reality system. This will take up two racks of space. One rack will be allocated as a tool work station. Another rack will be designated as the rover simulation with virtual reality system. Three racks will be used for the sandbox. The final three racks will be used as storage for the suits and for the tools and equipment that will be used in the simulation.

Upon entering the module, the crew members will suit up in the EVA suits and record the time it takes to accomplish this task. Over time, the goal is to decrease this time dramatically so that they may be efficient at suiting up quickly in the case of an emergency. As they become comfortable in their suits, they will proceed to test their visibility as well as examine the suits for any flaws. If everything is satisfactory, they will proceed with the simulation exercises. For the rest of this first hour, they will carry out various exercises to improve their maneuverability. These tasks include walking around the habitat carrying small items such as a medicine ball which will increase in weight as the simulation progresses. Other tasks include bending and squatting. These tasks will increase the ability of the crew to move around in the suits effortlessly.

For a period of two hours, one crew member will walk on the treadmill. This is a long period of time, but the astronauts need to increase their strength in the suits, as well as prepare themselves for long walks that will occur while on Mars. The treadmill will operate at various slow speeds and moderate inclinations. They will need to be able to walk up and down slopes since Mars' surface is very uneven. Also, in the case of an emergency like a solar flare, or a severe dust storm, they need to be able to make it back to their habitat as quickly as possible. Along with the treadmill, a virtual reality system will be provided for the crew. Not only will this be a training tool, it will also provide them with entertainment to break up the monotony of such a long period of walking on the treadmill. The VR system will be equipped with a Martian setting. This will allow the crew to actually know what it feels like to be walking on Mars' surface. Sporadically, there will be emergency situations in the VR system, such as a dust storm. This will psychologically prepare the crew in the event that they are caught up in a storm while performing an EVA.

A rover simulation will be available for the crew to work on for a period of one hour. They will be provided with a rover prototype, as well as a program that simulates the rover on Mars' surface. This activity will allow the crew to become proficient in the use of the rover. The rover will be an important staple in the exploration of Mars, and therefore the crew needs to be able to work with it as efficiently as possible. Therefore the crew will be training to maneuver the rover over Mars' surface as well as collect samples that they are unable to retrieve themselves.

The tool work station is also an integral part of the EVA training the crew will be doing. This station will provide the crew with the ability to improve their dexterity as well as their carpentry skills. Because a Mars mission will be exceedingly long, it is proposed that a habitat be built on the surface for the crew to live and work in for the duration of the mission. This will enable the crew to completely explore Mars, and to also determine whether Mars has the resources to

sustain life. Therefore the crew will need to assemble this habitat. Although they are familiar with assembling stations and performing EVAs to repair these stations, these activities occur in a 0g environment, and in suits that are unlike those that will be worn on a Mars EVA. This tool work station will come equipped with all small tools that the crew will encounter while building a Mars habitat. To become acquainted with these tools, they will be given small tasks to complete. These tasks will include assembling and disassembling small items. As they become more adept at this, they will be assigned more complicated tasks.

Another hour of the simulation will be devoted to the sandbox. This sandbox will mimic the surface of Mars. The ultimate reason why a mission to Mars is so coveted is because no one knows much about the planet. By sending humans to Mars, much more knowledge can be gained than by sending machines. A main part of what the astronauts will be doing while on the surface is collecting samples to determine whether or not life once existed on the planet and also whether or not water flows in the liquid state. This particular part of the simulation will prepare the crew for these daunting tasks. The crew will have to take samples of the sand and prepare them as if they are actual samples of Mars' surface. By doing this, they will become comfortable with the process that sample collection entails, as well as become proficient in the use of the tools needed to complete this task. Much of the information needed on Mars cannot be collected by a human but rather by a machine such as a radar or a seismic detector. Therefore, the crew will have mock versions of these devices so that they may become skillful at setting up these instruments correctly and efficiently. Finally, a habitat on Mars' surface would be highly susceptible to dirt and dust. Therefore, they will become experienced in the maintenance of their habitat in this type of environment. Not only will they need to maintain the area around the sandbox, which will aid in this exercise, but they will also need to become skillful in the upkeep of the habitat they will be residing in. Therefore, they will have miniature versions of solar panels, and other devices that will be kept outside the habitat and will be in need of constant care. They will have to brush the dirt, or sand, off of these devices, and make sure they are in proper working order. They will also have to make sure there is no buildup of debris.

The final hour of the simulation will be designated to cleaning up the module as well as exiting their suits. During this time they will place all tools that were used back in their storage. They will also make sure that the module is clean, and that the sandbox is covered. Upon exiting their suits, the crew will make sure that they are exactly in the same condition as they were in at the start of the simulation.

| Hour | Crew Member #1 | Crew Member #2 |
|---|---|---|
| 1 | Suit up - Exercises | Suit up - Exercises |
| 2 | Treadmill | Rover Simulation |
| 3 | Treadmill | Tool Work Station |
| 4 | Rover Simulation | Sandbox |
| 5 | Tool Work Station | Treadmill |
| 6 | Sandbox | Treadmill |
| 7 | Clean up - Reexamine suit | Clean up - Reexamine suit |

Table 8.2.2: EVA Crew Schedule

Originally, it was planned for the Mars simulation to have two glove boxes in the module rather than the tool work station and the sandbox. However, the crew has been extensively trained in using a glove box, and it would not provide the kind of training that is necessary for a Mars EVA. Therefore the design was changed to include the tool work station and the sandbox. These were found to be more appropriate and would provide the crew with a more hands on approach to the type of activities they will encounter on Mars.

## 8.3 EVA Suits (Hendrickson)

### *8.3.1 External*

For external EVA operations SSP will use the current ISS EMU suit. The ISS EMU is a well proven design. The US Airlock, which will be used on SSP, has the appropriate facilities to accommodate and maintain the ISS EMU suit. SSP will have six EMU suits to allow for EVA bailout capability in an emergency. Only two EMU suits are expected to be used during normal EVA operations for construction and maintenance. All six suits and their PLSS backpacks have a total mass of 996 kg which will be placed in the US Airlock.[89]

No EVAs will be performed while the station is spinning due to safety considerations. Before every EVA a 60 minute checkout procedure will be preformed to ensure that the suit is operating normally without leaks. Also, a pre-breathe period is required before an astronaut may depressurize, to eliminate the nitrogen in the astronaut's blood. Nominally a 4-hour pure O2 in-suit pre-breathe will be performed before every EVA with some mild exercise. This pre-breathe period can be reduced by

Table 8.3.1. Prebreathe Procedures[90]

| Time at 10.2 psi | Initial prebreathe | Final in-suit prebreathe |
|---|---|---|
| 0 hours | 0 minutes | 4 hours |
| 12 hours | 60 minutes | 75 minutes |
| 24 hours | 60 minutes | 40 minutes |
| 36 hours | 0 minutes | 40 minutes |

[89] HSF – The Shuttle. 07 Apr. 2002. 03 May 2006 <http://spaceflight.nasa.gov/shuttle/reference/shutref/orbiter/eclss/emu.html>.
[90] United States. NASA. International Space Station Familiarization. Houston, Texas: 31 July 1998.

depressurizing the cabin to 10.2 psi 12-36 hours before the EVA as shown in table 8.3.1. The initial pre-breathe period shown is a period where the astronauts breathe pure $O_2$ shortly before the depressurization to 10.2 psi.

While the EMU has enough oxygen to operate for 7 hours independently there are only 6 hours of planned work allowed while not connected to the station. 15 minutes is reserved for leaving the airlock, another 15 minutes is reserved for returning to the airlock, and 30 minutes is general reserves for unplanned time. If the EMU is connected to the station through an umbilical then the oxygen, water, and power can be provided by the station allowing for much longer EVAs.

After each EVA certain maintenance must be preformed on the EMU suits. The Metrox $CO_2$ scrubbers must changed out and baked in the US Airlock oven for 14 hours to recharge them. Also, assuming the batteries have not been recharged through the umbilical during the EVA they must also be recharged after the EVA. Because of the need to replace an o-ring related to the Metrox scrubbers, the EMU's will be allowed to go through a maximum of 27 cycles before being replaced.[91]

### *8.3.2 Internal*

For the internal Mars EVA simulation ILC Dover's I-Suit will be used. The ISS EMU could not be used for the Mars EVA simulation since the EMU is specifically designed for zero-g operations and is much to heavy and bulky for planetary operations. The I-Suit on the other hand is designed specifically as a planetary EVA suit as such it is much lighter and easier to work in under gravity loads.[92] SSP will be equipped with two I-Suits in the Columbus module for Mars EVA simulation activities. The I-Suit will be pressurized to 4.3 psi above the cabin atmosphere and the suit atmosphere will be consistent with the cabin atmosphere. The nitrogen, oxygen mix in the suit allows for simplicity when providing suit atmosphere and prevents oxygen poisoning. The 4.3 psi pressure difference allows the suit to function properly and produce the same resistance of the pressure bladder that would be experienced on a Mars EVA. The total mass for two rear-entry I-Suits and two EMU PLSS backpacks for the I-Suits is 201 kg.[93] 4.3 psi pressure difference is equivalent to approximately 3 meters depth underwater. Based on Navy dive tables[94] no denitrogenization is required so long as each EVA lasts no longer than 13.3 hours and there are 12 hours between EVA simulations.

## 8.4 Mars EVA Considerations (Khoury)

In order to simulate EVA activities on SSP, as dictated by Lv.1 requirement 1, the Mars Reference Mission was consulted to determine what guidelines should be followed.

---

[91] Bell, Ernest R., Oswald, David C. "Past and Present Extravehicular Mobility Unit (EMU) Operational Requirements Comparison for Future Space Exploration." United Space Alliance, AIAA 2005-6723, 2005.

[92] Abramov, I, Moiseyev, N and Stoklitsky, A. "Concept of Space Suit Enclosure for Planetary Exploration." SAE Inc., 2001-01-2168, 2001.

[93] Graziosi, D, Ferl, J, and Splawn, K. "Evaluation of a Rear Entry System for an Advanced Spacesuit," SAE International Conference on Environmental Systems, 2005-01-2976, Rome, Italy, 2005.

[94] US Navy Decompression Tables and Procedures, Part One. 11 May 2006 <http://www.ndc.noaa.gov/pdfs/USNDeco1.pdf>.

First, EVAs should be conducted with a minimum of 2 astronauts, utilizing the buddy system. If one astronaut is injured, the other can perform rescue operations. On SSP, it is assumed no astronaut will be physically harmed during the Mars EVA simulation but performing rescue exercises should be a part of the training regiment.

The current reference mission calls for avoiding performing EVA's during dust storms and other potentially dangerous situations. Therefore, performing EVAs in ideal conditions, as would be experienced in Columbus on SSP seems to correspond to this plan.

Another aspect of Mars travel that could be implemented would be a forced transmission delay between the ground crew and MMS crew. Of course, this is derived from the fact that a crew sent to Mars would have an approximately 20 minute communication delay between them and earth. However, under emergency circumstances it would be necessary to maintain real-time communication with the ground crew to help assist and oversee emergency procedures.

Since lighting conditions can be altered for the simulation, performing EVA exercises in nighttime conditions will be implemented to test the adequacy of the suits and EVA procedures[95].

## 8.5 Astronaut Composition (Marquart)

As the ultimate purpose of SSP is to simulate a Mars mission, the dynamics of the station crew should fit this objective as well. That said, the responsibilities of a space station crew will be different from those of a Mars exploration crew, and the astronauts should be chosen accordingly. Once mission operations commence, there will be a crew of six astronauts aboard the station.

The NASA Mars Exploration Reference Mission[96] calls for crew expertise in three areas: command, control and vehicle operations; scientific analysis; and habitability operations. The following chart describes the skill sets required of a Mars exploration crew:

[95] Stephen J. Hoffman, ed., The Mars Surface Reference Mission: A Description of Human and Robotic Surface Activities NASA TP-2001-209371, NASA Johnson Space Center, Dec., 2001

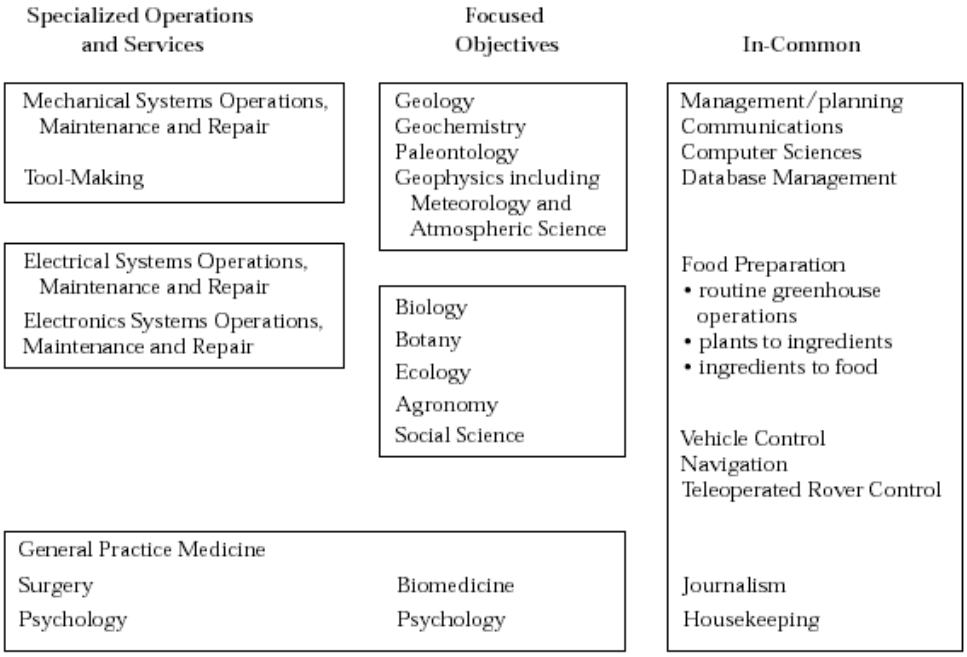


Fig. 8.5.1: Mars Mission Astronaut Skill Set[96]

In Fig. 8.5.1 there are more skills than crew members, and though members of the crew may be multi-disciplined, some of the skills may not be accounted for. Furthermore, this is a skill set for a Mars reference mission, and certain skills may not be required aboard the SSP. For example, the ability to prepare food may be studied aboard SSP, but it will not be required, as enough food will be launched for the duration of each mission. Also, geosciences will be an important focus of an actual Mars mission, but not much can be done aboard the SSP that can't be done on Earth, with the exception of simulating certain Mars EVA operations. Specific skill sets are required due to the size of the crew and the length of the mission, important factors both for the Mars Reference Mission and aboard SSP.

Two essential positions among the crew are the flight commander and co-pilot. They will be responsible for the command, control and navigation operations of SSP. Furthermore, they will be the responsible for piloting the CEV to and from the station. Ideally, these crew members would be trained in communications, and could be responsible for exchanges with mission control, etc. These crew members would also be likely to operate the surface vehicles on an actual Mars mission; this could be a focal point for them during the EVA simulations aboard SSP. In the past, it has been common for the commander to be the crew leader, responsible for the overall success of the mission and safety of the crew. For a mission of this duration, however, this may or may not be the case. The crew leader will be chosen on a crew-to-crew basis depending on the mission objectives.

With a crew of six and a maximum mission duration of just under three years, medical issues are likely to arise. Therefore, the crew aboard SSP will have a fully-trained astronaut physician.

---

[96] Hoffman, Stephen J., Kaplan, David I., eds. *Human Exploration of Mars: The Reference Mission of the NASA Mars Exploration Study Team* - NASA SP-6107 - NASA Johnson Space Center, July 1997.

This person will be the designated crew medical officer. Aside from providing any necessary medical attention, this individual will take the lead role in habitability operations, including quantifying the effect of the variable gravity environment on the astronauts' physiology.

The remaining three crew members will be mission specialists, and their role will be dependant on the mission objectives and the backgrounds of the other three crew members. Examples of mission specialists could be scientists and engineers, and their role could range from scientific analysis for onboard experiments to SSP systems maintenance and repairs. Either of the pilots or one of these three crew members will also be medically trained, and capable of serving as a backup crew medical officer under the direction of experts on earth, if necessary. Engineers with mechanical, electrical, and/or systems backgrounds would be ideal for station maintenance. The specialties of scientists on board will be dependant on the mission objectives.

Table 8.5.1: Sample Crew Composition for SSP

| Position (Number) | Specific Duties |
|---|---|
| Pilot (2) | SSP navigation and control operations |
| | CEV flight command |
| | Communications |
| Astronaut Physician (1) | Primary crew medical support |
| | Quantify effect of variable gravity on astronauts |
| Mission Specialist (3) | Scientific analysis (scientist) |
| | Station repair/maintenance (engineer) |
| | Backup medical support |
| **Total (6)** | EVA Simulations |
| | Housekeeping |
| | Public Outreach |
| | Mission objective assistance (science, etc.) |

All of the crew members will assist in the daily operations of SSP, including science module support, EVA simulations, housekeeping duties, and public outreach. Actual schedules will be sent to the astronauts on a daily basis; this is the protocol currently followed by ISS, will be the same protocol followed on SSP.

## 8.6 Justification for Sleep Schedules/Personal Sleep spaces (Khoury)

According to "Guidelines and Capabilities for Designing Human Missions," Crew members should be provided with their own private space. If every member of the crew has his/her own sleeping quarters, putting the crew on a rotating schedule is unnecessary. Therefore, it is recommended that the crew be provided with individual spaces and work on the same schedule

to maintain a positive psychosocial environment that develops relationships and teamwork among the crew[97].

## 8.7 Justification for Transfer through Microgravity center of station (Khoury)

Yuri Gagarin spent 108 minutes in microgravity with no noticeable effects on his physiology. Even the astronauts of the Apollo program had little difficulty readapting to earth's gravity after their longer missions of several days to a week[98]. Therefore, it can be assumed a relatively short time in microgravity per day (2-3 hrs) can be allowed for the crew to work and move between townhouse A and townhouse B. This assumption asserts that the long-term effects at particular gravity level overshadow the short-term effects of microgravity. However, allowing longer times of about a day in microgravity could possibly affect bone and muscle mass and should be avoided.

[97] Christopher S. Allen, Rebeka Burnett, John Charles, Frank Cucinotta, Richard Fullerton, Jerry R. Goodman, Anthony D. Griffith, Sr., Joseph J. Kosmo, Michele Perchonok, Jan Railsback, Sudhakar Rajulu, Don Stilwell, Gretchen Thomas, Terry Tri, Jitendra Joshi, Ray Wheeler, Marianne Rudisill, John Wilson, Alyssa Mueller, and Anne Simmons, Guidelines and Capabilities for Designing Human Missions NASA TM–2003–210785

[98] "Living in Space: Physiological Effects." Oracle ThinkQuest.`<http://library.thinkquest.org/C003763/pdf/adapt02.pdf>

# IX. Construction

## 9.1 Launch Windows (Marquart)

Assuming the construction, re-supply, and crew rotation missions are launched from Johnson Space Center (JSC), there exists one launch window per day to the SSP orbit. The image below shows a sample of the ground tracks for SSP over a one day period; the magnification shows those nearby JSC.

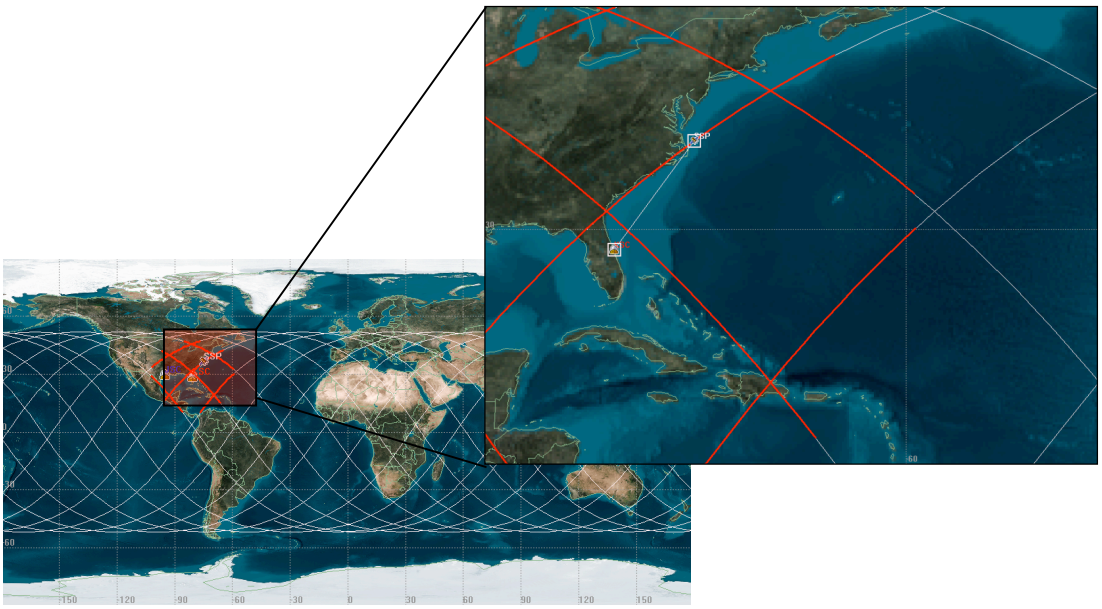


Fig. 9.1.1: Sample Orbit Ground Tracks for SSP

The space station actually passes over the JSC vicinity twice during a 24 hour window. However, the north to south launch sends the vehicle up over inhabited areas, so only the south to north direction is used. The launch window lasts 2.5-5 minutes.[99]

To determine the $\Delta V$ required for a launch to SSP orbit, the velocity of the launch site and launch azimuth must be determined. The velocity of the launch site can be computed in [m/s] by the formula:

$$V_L = (464.5)\cos L$$

where L is the latitude of the launch site.[80] With JSC at a latitude of 29.56º N,

$$V_{JSC} = 404 \text{ m/s.}$$

In topocentric-horizon coordinates (*SEZ*), the components of the launch velocity required to achieve a burnout velocity of $V_{bo}$ are:

[99] Harwood, William. "STS-108 Launch Windows." 30 Nov. 2001. Spaceflight Now. 14 April 2006. <http://spaceflightnow.com/station/stage8a/fdf/108windows.html>

$$V_S = -V_{bo} \cos\beta$$

$$V_E = V_{bo} \sin\beta - V_L$$

where $\beta$ is the launch azimuth defined by $\beta = 90° - i$.[80] SSP has an orbital velocity of 7.7 km/s, which means that $V_{bo} = 7.7$ km/s as well. The inclination of the SSP orbit is $i = 51.6°$.

Therefore, the two components of launch velocity are $V_S = -6.39$ km/s and $V_E = 3.89$ km/s. ($V_Z = 0$ when achieving a flight path angle of 0º in the desired orbit). Taking the magnitude of these two components, the required $\Delta V$ required for launch is:

$$\Delta V = 7.46 \text{ km/s.}$$

This calculation does not account for velocity loss due to drag and gravity. According to [80], a typical launch vehicle needs about an additional 1.5 km/s to make up for these losses. Therefore, the total launch $\Delta V$ is approximately

$$\mathbf{\Delta V_{launch} \approx 9.0 \text{ km/s}}$$

De-orbit windows will occur more often, as the CEV could designed to land both on land and in the ocean. The $\Delta V$ required to de-orbit a spacecraft from the SSP is dependant on the flight path angle (*fpa*) of the return spacecraft and the altitude of the de-orbit trajectory. The larger the *fpa*, the more accurately the spacecraft can be de-orbited. However, a higher *fpa* also causes a faster re-entry and more heat generation. The equation to compute the $\Delta V$ required for de-orbit is:[100]

$$\Delta V_{deorbit} = \sqrt{\frac{\mu}{r_a}}\left[1 - \frac{\cos(fpa)\sqrt{2\left(R - R^2\right)}}{\sqrt{1 - R^2\cos^2(fpa)}}\right]$$

where $r_a$ is the radius at apogee, $\mu$ is the gravitational parameter given by $\mu = 398600.4$ km$^2$/s$^3$, and $R = \frac{r_e}{r_a}$ is the ratio of the altitude of re-entry ($r_e$) to the altitude of the apogee.

Since the *fpa* will be chosen based on what is being de-orbited, the following chart shows the $\Delta V$ required for de-orbiting a spacecraft to a 50 km altitude over a range of *fpa*'s:

[100] Akin, David. "Launch and Entry Vehicle Design: Atmospheric Entry." 2004. 14 April 2006. <http://spacecraft.ssl.umd.edu/academics/791S04/791S04.L03.pdf>

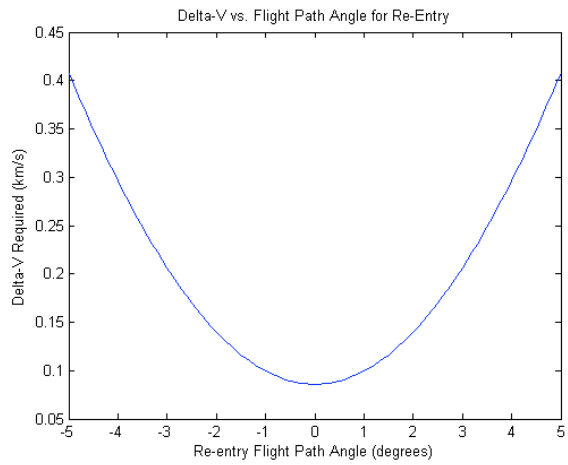


Fig. 9.1.2: $\Delta V_{de\text{-}orbit}$ vs. Flight Path Angle

The $\Delta V$ required for de-orbiting a spacecraft ranges from about **75 m/s** to **400 m/s** for flight path angles of magnitude from 0º to 5º, respectively.

## 9.2 Launch Vehicles (King)

### *9.2.1 Crew*

SSP crews will be delivered to the station with the NASA-proposed Crew Launch Vehicle (CLV) and Crew Exploration Vehicle (CEV). NASA plans to retire the Space Shuttle before 2011, but SSP construction and operations are not scheduled to start until 2017. The Exploration Systems Architecture Study[101] (ESAS) details the requirements and specifications of the CLV. It is capable of carrying 6,000 kg of unpressurized cargo to ISS orbit using the Cargo Delivery Vehicle (CDV). Alternatively, it can take a crew of six with minimal cargo to ISS orbit using the Block 3 version of the CEV. This CLV/CEV combination will be fully operational by 2012, and is expected to deliver crews to the ISS after the Space Shuttle is retired. It is the only American human-rated launch vehicle scheduled for operation by 2017.

The launch cost for the CLV with CEV is estimated to be $300M. An exact cost for launching the CLV is unknown, because the vehicle design is not yet complete, and the first launch is not scheduled until 2012. This is a conservative estimate based upon the current $284M per launch cost of the Space Shuttle[102]. The CLV/CEV carries minimal cargo and should therefore be less expensive to launch than the shuttle, which can carry 12,500 kg cargo to ISS. However, the shuttle has been launched over 100 times across a span of 24 years, while the CLV/CEV is only scheduled to be launched 11 times before 2017. Additionally, Shuttle launch costs vary greatly with mission parameters and payload, with some missions having cost nearly $750M. The CLV/CEV launches supporting SSP operations will carry only crew, therefore the launch costs should remain consistent.

[101] United States. NASA.Exploration Systems Architecture Study. 2005.
[102] Wade, Mark. "Shuttle." Encyclopedia Astronautica. 06 Jan 2006. 15 Feb 2006 <http://www.astronautix.com/lvs/shuttle.htm>.

### *9.2.2 Cargo*

The Boeing Delta IV family of vehicles will supply SSP with new components during construction and consumables throughout the lifetime of the station. The construction of SSP will require launching new components with individual masses of more than 16,000 kg. With a maximum cargo capacity of 6,000 kg, the CLV does not suffice. There are four launch vehicles capable of carrying over 20,000 kg to ISS orbit. The payload capacity, cylindrical fairing volume, and cost of these vehicles are compared below in Table 9.2.1.

Table 9.2.1. Cargo Launch Vehicle Comparison

| | Payload Fairing | | | Cost per |
|---|---|---|---|---|
| **Vehicle** | **Capacity ( kg )** | **Diameter ( m )** | **Height ( m )** | **Launch ( $M )** |
| Delta IV Heavy | 24,000 | 4.6 | 11.0 | 254 |
| Atlas V Heavy | 29,000 | 4.6 | 7.6 | 254 |
| Falcon 9 S9 | 25,000 | 4.6 | 7.5 | 78 |
| ESAS CaLV | 55,000 | 7.5 | 12.0 | *unknown* |

The Convair Atlas V Heavy is a proposed upgrade to the Atlas 5 system capable of carrying 29,000 kg to ISS orbit. The U.S. Air Force currently estimates its launch cost to be $254M, which is equal to that of the Delta IV Heavy.[103] Though it carries 5,000 kg more than the Boeing option, the 7.6 m length of its payload fairing may result in some launches significantly under-utilizing the payload capacity.[104] For example, the PIRS assembly is 7.4 m tall, but only 6,000 kg. This assembly would fill the available fairing volume, but use less than 25% of the payload capacity. Additionally, there are currently no plans to produce this vehicle.

The SpaceX Falcon 9 S9 appears to be a promising solution. It has a similar payload fairing to the Atlas 5 Heavy, and it can carry an estimated 25,000 kg to ISS orbit for less than a third of the launch costs of the Boeing or Convair vehicles.[105] SpaceX states that the particularly low launch costs are achieved through modular designs and using as many of the same components from their smaller vehicles as possible. To date, the Falcon 9 S9 is not complete, and the Falcon 1 is the only vehicle in the series that has been launched. The launch failed 25 seconds into the flight due to a fuel leak igniting.[106] Because the Falcon 9 S9 is dependent upon Falcon 1 technology, it is not reasonable to assume it will eventually be built or launched for the advertised price.

---

[103] Wade, Mark. "Atlas V Heavy." Encyclopedia Astronautica. 28 Mar 2005. 15 Feb 2006 <http://www.astronautix.com/lvs/atlheavy.htm >.
[104] Isakowitz, Stephen J., Joshua B. Hopkins, and Joseph P. Hopkins Jr.. International Reference Guide to Space Launch Systems. 4th ed. Reston, VA: AIAA, 2004.
[105] "Falcon Overview." SpaceX. 2003. Space Exploration Technologies Corporation. 15 Feb 2006 <http://www.spacex.com/>.
[106] "SpaceX's Inaugural Falcon 1 Rocket Lost Just After Launch." SPACE.com. 24 Mar 2006. Imaginova Corporation. 27 Mar 2006 <http://www.space.com/missionlaunches/060324_spacex_failure.html>.

The ESAS report describes plans for a Cargo Launch Vehicle (CaLV) which can take 55,000 kg of payload to ISS orbit.[107] The cost of this vehicle is difficult to estimate, because nothing of its size or payload capacity currently exists. The cargo capacity of the proposed CaLV is so great that consumables for the entire 10-year life of SSP and all new station components could be delivered in only six launches. However, this capacity would be greatly under-utilized, since SSP is only designed to store 3 years of consumables on station, and construction cannot proceed quickly enough to justify delivering more than one major module per cargo launch. Additionally, a single failed launch would be severely damaging to the program. The CaLV is therefore not an acceptable solution to the needs of SSP.

The Boeing Delta IV Heavy is the only launch vehicle in the comparison which has been launched successfully.[108] While it has the lowest payload capacity of any option, the payload fairing is more than 3 m taller than those of the Atlas V and Falcon 9.[109] This tall fairing will allow certain components, such as the PIRS assembly to be constructed on Earth and launched to the station as one piece. This will increase safety and efficiency by reducing the number of EVAs that must be performed by the construction crews.

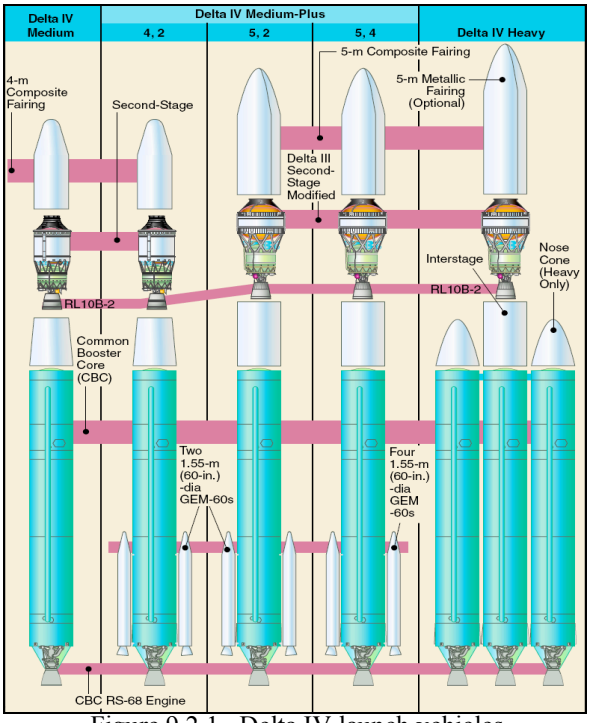

Figure 9.2.1. Delta IV launch vehicles

The Delta IV Heavy is the largest of five vehicles in the Delta IV family. All vehicles use the same Common Booster Core (CBC) with an RS-68 engine for the first stage, with the Heavy version using three CBCs instead of one. The Medium-Plus vehicles use two strap-on GEM-60s to increase the range of the first stage. The second stage in all of the vehicles uses an RL10B-2 engine. The five configurations are shown in Figure 9.2.1 to the right.[110]

Instead of delivering cargo to the station with only the Delta IV Heavy, SSP will use multiple vehicles from the Delta IV family. The vehicles carry payloads to ISS orbit ranging from 8,500 kg to 24,000 kg, and cost from $133M to $254M to launch.[111] The payload fairing diameter is 4 m for the two smallest vehicles and 5 m for the three largest, which use a modified Delta III second stage to propel the larger fairings.

---

[107] United States. NASA.Exploration Systems Architecture Study. 2005.
[108] Wade, Mark. "Delta IV Heavy." Encyclopedia Astronautica. 28 Mar 2005. 15 Feb 2006 <http://www.astronautix.com/lvs/delheavy.htm >.
[109] Delta IV Payload Planners Guide. Huntington Beach, CA: Boeing, 2000.
[110] Delta IV Payload Planners Guide. Huntington Beach, CA: Boeing, 2000.
[111] Isakowitz, Stephen J., Joshua B. Hopkins, and Joseph P. Hopkins Jr.. International Reference Guide to Space Launch Systems. 4th ed. Reston, VA: AIAA, 2004.

The ability to tailor the launch vehicle to payload requirements will allow SSP to optimize cargo launches for mass, volume, and cost. For example, a mission to re-supply the station's hydrazine tanks might only require a payload capacity of 10,400 for the hydrazine tank and a maneuvering package. Launching this payload in a Delta IV Heavy would cost $254M, while leaving 57% of the payload capacity unused. Delivering this to the station with a Delta IV Medium-Plus 4,2 uses 88% of the payload capacity and costs $116M less than the launching the Heavy vehicle. Table 9.2.2 details the payload capacities, fairing dimensions, and costs of the five Delta IV launch vehicle configurations.

Table 9.2.2. Boeing Delta IV Family

| Variant | Payload Capacity ( kg ) | Inner Diameter ( m ) | Cylinder Height ( m ) | Cone Height ( m ) | Launch Cost ( $M ) | Specific Cost ( $/g ) |
|---|---|---|---|---|---|---|
| Medium | 8,500 | 3.8 | 5.8 | 4.5 | 133 | 15.7 |
| Medium+ 4,2 | 11,750 | | | | 138 | 11.7 |
| Medium+ 5,2 | 10,250 | 4.6 | 6.4 | 4.7 | 150 | 14.6 |
| Medium+ 5,4 | 13,500 | | | | 160 | 11.9 |
| Heavy | 24,000 | 4.6 | 11.0 | 4.7 | 254 | 10.6 |

All major modules and components will be launched in one of the three larger vehicles, because the MPLMs and Nodes 3B and 3C are designed to fit exactly into the 4.6 m inner diameter of the larger payload fairings. Because the Heavy model has the lowest cost per unit mass of payload, most cargo launches will use this vehicle to minimize the total launches and launch costs.

## 9.3 Reliability of Launch Vehicles (Moser)

The Delta IV family is going to launch most of the cargo for SSP. It will require 12 Delta IVs launches (please cross-check this to make sure it is the most recent number) to create SSP. So far, including all the different types of Delta IVs, there have been four launches. All of these were considered successful flights, although on one flight the delta IV had a slight miscalculation and did not reach as high an orbit as desired. With 4 launches and no failures they could claim 80% reliability with 60% confidence. This is not a very good data sample on which to base reliability numbers. Therefore the budget should allow sufficient contingency money in case the Delta IV is not very reliable.

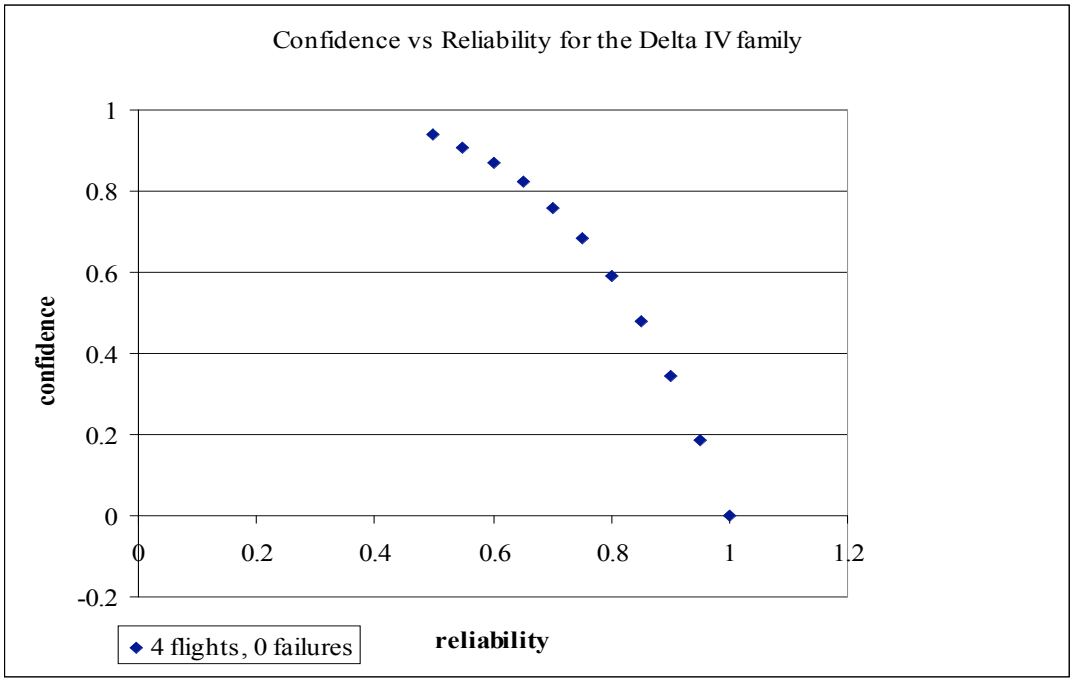


There is no data on the CEV reliability yet because it has not been built or flown. However, it could be modeled as being at least as reliable as the space shuttle (and hopefully better!). The space shuttle has had 114 flights of which 2 critically failed. The shuttle could claim 94% reliability with 99% confidence or 97% reliability with 85% confidence, etc.

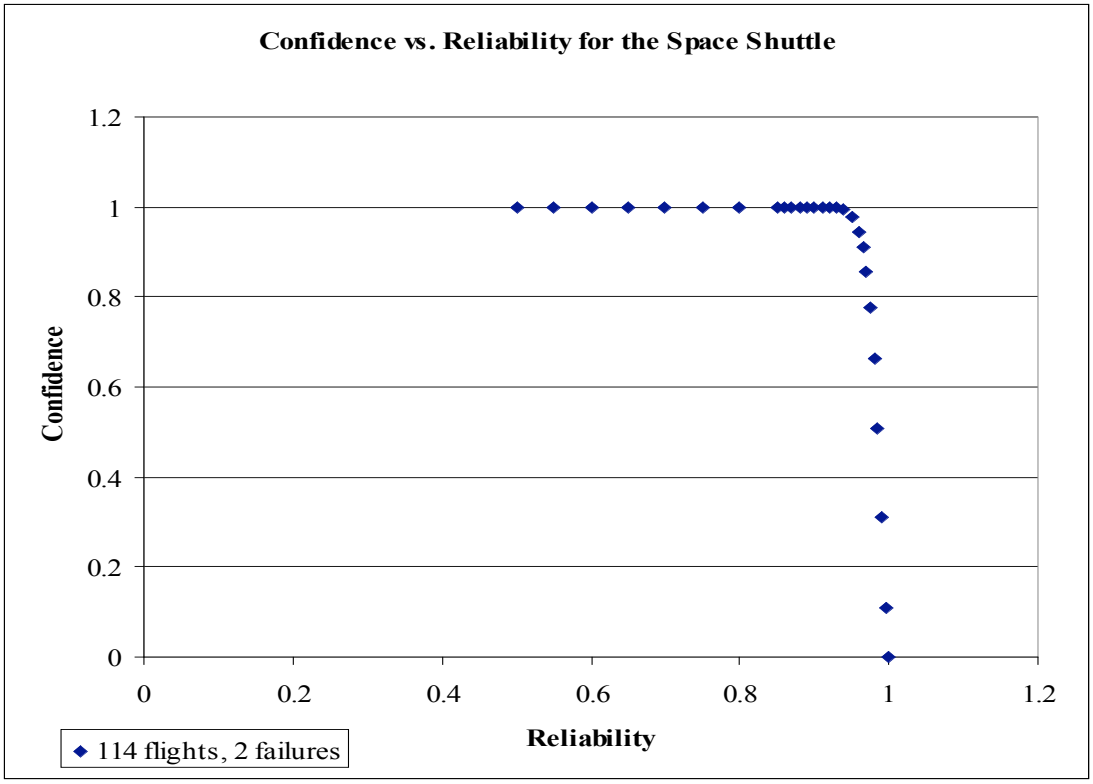


If the CEV is at least this reliable there would probably be no failures flying it 22 times (check this number also).

## 9.4 Construction (King)

### *9.4.1 Overview*

Upon its scheduled completion in 2010, ISS will have 16 major modules, 12 truss sections and numerous solar panels and radiators.[112] In order to reconfigure the station into SSP, 14 modules and 2 truss sections must be relocated, and 1 module and 1 truss section must be removed. Additionally, 10 newly built modules, solar panel arrays, radiators, avionics, and propulsion packages must be installed. Assuming it takes one EVA per disconnection, two EVAs per connection, and one additional EVA for any operation involving pressurization or plumbing, the process of converting ISS to SSP will take 127 EVAs to complete. The Space Shuttle supported most of the EVAs required to build ISS. Even if the Shuttle were to remain in service past 2011, a single Shuttle mission supports only 4 EVAs, meaning 32 launches would be required to complete SSP construction at a total launch cost of over $9 billion.

The CEV is incapable of supporting EVAs, because it is a single compartment vehicle with no airlock, and its cargo capacity (400 kg) is less than the mass of three EVA suits (497 kg).

[112] "International Space Station." Wikipedia. 15 Mar 2006. Wikimedia Foundation. 10 May 2006 <http://en.wikipedia.org/wiki/International_space_station>.

However, if the station remains habitable during construction, crews living aboard the station can perform all of the necessary EVAs. In this case, construction can be carried out at a quicker pace, limited by the frequency with which station crews can perform EVAs and availability of cargo launches. Because construction will be done in microgravity, the CLV will be launched every six months to replace the crew. Maintaining the habitability of the station also allows individual systems and scientific instruments to be tested and calibrated prior to the variable gravity testing and Mars mission simulation phases.

The station design is well-suited to this purpose, because the "backbone" of ISS remains unchanged through the reconfiguration to SSP. Figure 9.4.1 displays the configuration of ISS upon completion. Node 1 remains connected to truss segment S0, and the major truss segments remain in place. Because the main truss structure stays intact, the Mobile Servicing System (MSS), including Canadarm2, will be able handle and move large components during construction.

Figure 9.4.1. ISS Configuration in 2011

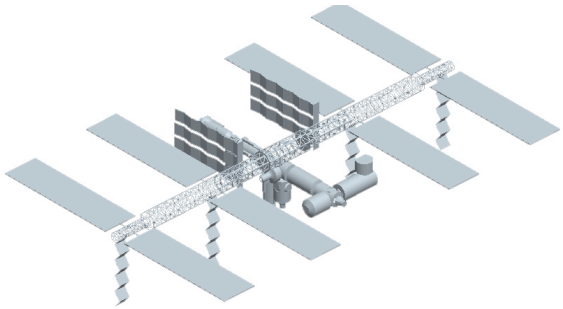

### *9.4.2 Stage I*

The first major step of the construction process is to build the living quarters of SSP, known as Townhouse A. Almost all of the habitable volume of the station will remain usable, because Node 3A and the Russian RM are the only major modules that must be relocated during this stage. Much of the new crew systems, avionics, propulsion, and power-generating equipment will be delivered to the station during this stage to replace ISS systems that are near the end of their lifetimes.

The new water and hydrazine tanks are the first major components installed. This allows the station to convert to the more efficient SSP atmospheric cycle as soon as possible. Next, a counter-rotating assembly (CRA) and the new MDMs are mounted on the S0 truss. The P6 truss segment is then relocated to the CRA. Following that, solar panels, radiators, antennas, and propulsion packages are installed on P6. The newly built Node 3B is launched and connected to the end of the P5 truss segment vacated by the P6 relocation. Node 3A is now removed from Node 1 and connected to Node 3B, and the inflatable transfer tube for Townhouse A is connected between Node 3A and Node 1.

At this point, the crew has access to the new section through the transfer tube. The three refitted MPLMs are delivered to the station on successive launches. Donatello is connected to Node 3B, Leonardo and Raffaello to Node 3A. PMA 3 is moved from Node 3A to Node 3B, and the Russian RM is connected to PMA 3. Finally, the cupola is moved to the top of Node 3A. To the right, Figure 9.4.2 shows the station configuration after stage I.

Figure 9.4.2. SSP between Stages I & II

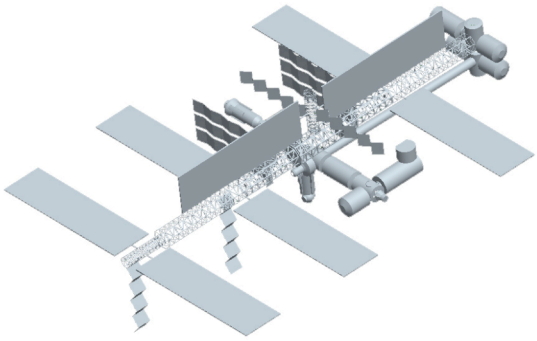

### *9.4.3 Stage II*

The crew now resides in the completed Townhouse A, so the science modules from ISS can be relocated, and Townhouse B can be built. The first step of stage II is to relocate the S6 truss segment. To do this, the PIRS assembly is launched and attached to Node 1. The PIRS assembly consists of PIRS, PMA 5, a CRA, and the PIRS-S6 adapter. It is assembled on Earth and delivered as a single piece to ease construction. S6 is then mounted on the PIRS assembly, and the S6 solar panels, radiators, antennas, and propulsion packages are installed. Node 3C is launched and connected to the end of the P5 truss segment where P6 was previously. Node 2 is then relocated from Destiny to Node 3C. The JEM PM and Columbus modules remain connected to Node 2 as they were on ISS.

Figure 9.4.3. SSP between Stages II & III

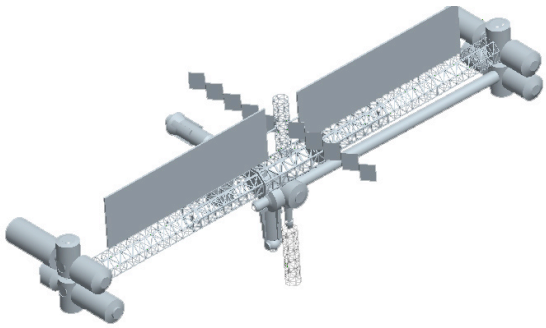

Next, Destiny is removed from Node 1 and connected to Node 3C. Finally, JEM ELM-PS is moved from JEM PM to Node 3C. The science section of SSP is now complete, but remains internally unreachable by the crew, because the inflatable transfer tube cannot be connected until the U.S. Airlock is removed from Node 1. The station configuration at the end of stage II is shown in figure X-XX, to the left.

### *9.4.4 Stage III*

During the final stage of construction, the stability arms are reconfigured and structural reinforcements are installed. First, PMA 2 is removed from Node 2 and connected to Node 1, where Destiny once was. Zvezda is then relocated to PMA 2, with the crew tank packages. Zarya, with the MLM attached, is removed from PMA 1, and the MLM is connected to PMA 1 in its place. PMA 4 is launched and connected to the end of the MLM, and the U.S. Airlock is moved from Node 1 to PMA 4. The inflatable transfer tube can now be delivered and deployed to connect Townhouse B to the rest of the station. At this point, module relocation is complete and the interior layout of the station does not change.

Now, the stability arm reinforcements, along with the tensioning winches for the townhouse support cables are installed. Support frames are then installed on Townhouse A and Townhouse B, and the support cables are connected to the winches. Figure 9.4.4, on the right, shows the completed Space Station Phoenix. Finally, the Z1 truss is attached to Zarya, which is filled with unneeded tools, unused racks, and garbage. Zarya is then removed and de-orbited to burn-up on reentry.

Figure 9.4.4. Completed SSP

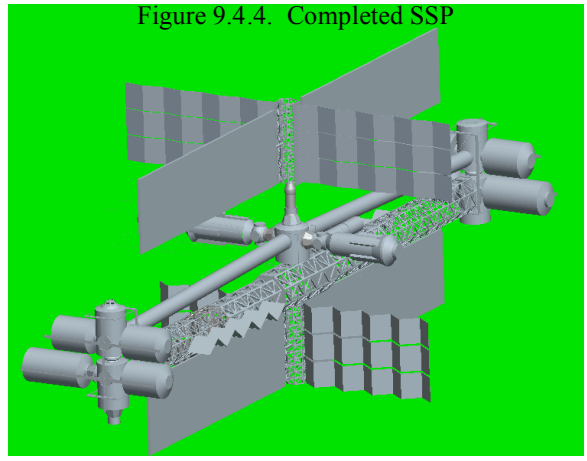

### *9.4.5 Summary*

The reconfiguration of ISS into SSP will take 9 crews 4.5 years to complete. This is significantly less than the 12 years of ISS construction, and leaves plenty of time for thorough variable gravity experimentation and a complete Mars mission simulation during the ten-year life of SSP. While the construction schedule may seem aggressive, it requires no more than three EVAs per month from the crew and an average of less than three cargo launches per year. Astronauts will be able to live onboard throughout the entirety of construction, with only a minimal loss of livable volume during stage I. Table 9.4.1 summarizes the construction process.

Table 9.4.1. Construction Summary

| Stage | Time (yrs) | Launches | | EVAs | Objectives |
|---|---|---|---|---|---|
| | | Crew | Cargo | | |
| I | 1.5 | 3 | 7 | 48 | Build Townhouse A |
| II | 1.0 | 2 | 3 | 32 | Build Townhouse B |
| III | 2.0 | 4 | 2 | 47 | Reconfigure Stability Arms<br>Install Reinforcements |
| Totals | 4.5 | 9 | 12 | 127 | |

### *9.4.6 Launch Plan (King)*

Almost 300,000 kg of material must be delivered to SSP throughout the ten-year life of the station. Approximately half of the material is in the form of new modules and components to be permanently added to the station. The other half is consumable items, including food, water, clothes, hydrazine, etc. The external suits used by the astronauts for EVA are also considered consumables as they must be replaced every 27 EVAs or 365 days. Timing is critical for both the new station components and the consumables. New modules cannot be allowed to drift in orbit near the station, so they must not be delivered too early before they are scheduled to be installed. Consumables stores on the station must be maintained at or above minimum reserve levels, but the station cannot store enough consumables to last its entire life. Details regarding the masses of individual components and consumables can be found in Appendix A.8.1.

The launch plan for SSP ensures that parts and consumables are on station at the proper time, while optimizing use of payload capacities and minimizing total launch costs. The launch timeline can be seen in Appendix A.8.2. As stated above, most cargo missions are launched on the Delta IV Heavy. However, three of the missions do not require the 24,000 kg payload capacity of the larger vehicle, and therefore use one of the Medium-Plus variants. Table 9.5.1 below is a summary of the 16 cargo launches required to supply SSP construction and operations.

Table 9.5.1. Cargo Launch Summary

| Vehicle | Launches | Payload (kg) | | Cost ($M) |
|---|---|---|---|---|
| | | Capacity | Utilized | |
| Delta IV Medium+ 4,2 | 1 | 11,750 | 10,169 | $ 138 |
| Delta IV Medium+ 5,2 | 1 | 10,250 | 8,446 | $ 150 |
| Delta IV Medium+ 5,4 | 1 | 13,500 | 10,122 | $ 160 |
| Delta IV Heavy | 13 | 312,000 | 268,802 | $ 3,302 |
| **Total** | **16** | **347,500** | **279,539** | **$ 3,750** |

Each cargo mission was devised to leave a 10% payload mass margin, meaning 10% of the payload capacity of the launch vehicle is reserved for support structures. This does not include the maneuvering packages used to rendezvous the cargo with SSP. All payloads have also been verified to fit within the volume of the fairing for the given launch vehicle. Payload layouts can be found in Appendices A.8.3 and A.8.4. Accounting for the 10% margin, the SSP cargo launch utilizes 95% of the available payload capacity. The effective cost per unit mass to deliver material to the station is $13,400/kg, not including any support structures.

## 9.5 Design of Maneuvering Propulsion for Launched Payload (Schroeder)

### *9.5.1 Main Thruster Selection*

Every payload that is launched from Earth is placed into a low Earth orbit. However, the payload is not necessarily placed in orbit near the space station. A thruster needs to be attached to every payload to thrust the mass near the space station construction area. There are two steps to this operation. First, a normal thruster needs to thrust the payload to the general construction area. Next, a set of reaction control thrusters needs to place the payload close enough to the construction area that the Canada Arm can grab the payload and place it where it is needed.

The main thruster, and all structural components relating to the propulsion system, are required to be small in size and as light as possible. The propulsion system will be located in the top, conical section of the payload section of the Delta launch vehicles with the engine oriented such that the exit of the engine is pointing towards the top of the conical section (see appendices A.8.3 and A.8.4). The propulsion system must also not be very long or wide so that most of the payload space can be used for the main items needed for the station. Therefore, only engines that were less than three meters in either diameter or length were considered.

The mass of propellants, avionics, propellant tanks, engine, and pressurization tanks also must be small so they don't take up much of the mass allowance for each launch and to minimize launch costs. For that reason, only engines with a dry mass below 200 kg were analyzed to minimize

mass. It is also preferable for the engines to have thrust vector control so the direction of the thrust can be directed and adjusted as necessary. All of the engines considered had either gimbals or other methods of thrust vector control available.

Several other design elements were also considered. The main engine needed to be at least late in the development stages in 2006 so it will reliably be at technology readiness six by the time it needs to be launched. The chosen engine should also be either designed by an American company, be designed in a joint venture including one American company, or be produced by a nation that works with NASA on space related projects. This is in keeping with the current NASA architecture.

The propulsion system is designed to boost a maximum payload of 23,000 kg. The system must be able to handle a delta V of approximately 100 m/s. The engines considered were the Aestus made by DaimlerChrysler (1), the Aestus II developed by DaimlerChrysler and Boeing Rocketdyne (1), the RS-72 developed by Boeing Rocketdyne (1), the Shuttle OME, or AJ10-190 by Aerojet (2), and the Pratt and Whitney RL10A-4 and RL10A-5. The basic characteristics of these engines can be seen in table 9.6.1.

Table 9.5.1. Engines Considered for Moving Launched Payload[113,114,115,116,117,118]

| **Engine** | **Oxidizer** | **Fuel** | **Engine Cycle** | **Average Thrust (kN)** | **Mixture Ratio** | **Isp (sec)** | **Engine Mass (Kg)** | **Engine Size: Length / Diameter (m)** |
|---|---|---|---|---|---|---|---|---|
| Aestus | $N_2O_4$ | MMH | Pressure Fed | 27.5 | 2.05 | 324 | 136 | 2.21 / 1.32 |
| Aestus II | $N_2O_4$ | MMH | Gas Generator | 46 | 2.05 | 337.5 | 148 | 2.2 / 1.3 |
| RS-72 | $N_2O_4$ | MMH | Gas Generator | 53 | 2.05 | 338.8 | 154 | 2.29 / 1.3 |
| Shuttle OME | $N_2O_4$ | MMH | Pressure Fed | 26.7 | 1.65 | 316 | 118 | 1.96 / 1.17 |
| RL10A-4 | LOX | $LH_2$ | Expander | 92.5 | 5.5 | 449 | 170 | 2.29 / 1.17 |
| RL10A-5 | LOX | $LH_2$ | Expander | 65.2 | 6 | 365 | 143 | 1.07 / 1.02 |

Once possible engines were chosen, they were then compared for the necessary propellant tank size, inert structural mass, propellant mass, and overall dimensions. For the analysis, an avionics mass of 40 kg, including wiring, was assumed. A fairing was also designed to encircle the propellant tanks. In an effort to decrease the length of the overall propulsion system, the propellant tanks were designed to be spherical. A thirty percent mass margin was also designed into the system to account for valves, feed system piping, and inefficiencies in the propellant system. Propellant has to be budgeted to account for propellant used to keep the vehicle's

[113] Wade, Mark. Astronautix. 2005. 02 05 2006 <http://www.astronautix.com >.
[114] "Aestus-Specifications." Space and Tech. 2001. Andrews Space and Technology. 02 05 2006 <http://www.spaceandtech.com/spacedata/engines/aestus_specs.shtml>.
[115] United States. NASA.Shuttle Reference Manual. NASA, 1988.
[116] Sutton, George P.. Rocket Propulsion Elements. 7th. New York: John Wiley & Sons, Inc., 2001.
[117] "RL-10-Specifications." Space and Tech. 2001. Andrews Space and Technology. 02 05 2006 <http://www.spaceandtech.com/spacedata/engines/rl10_specs.shtml>.
[118] "Pratt & Whitney - Products - Space - RL-10-B2." Pratt & Whitney. 02 05 2006 <http://www.pw.utc.com/prod_space_rl10b2.asp>.

velocity at a constant level during thrust vector control maneuvers.[119] Extra propellant also has to be brought to compensate for residual propellant that sticks to the walls of the propellant tanks, and for "off-nominal rocket performance".[120] In cryogenic tanks, as in the LOX/$LH_2$ system, some of the propellant can boil off, leading to a loss in available propellant. All of these concerns are accounted for in the 30% mass margin.

The densities of the propellants were found to be 1450 kg/m$^3$ for $N_2O_4$, 880 kg/m$^3$ for MMH, 1140 kg/m$^3$ for LOX, and 112 kg/m$^3$ for $LH_2$[121]. Initially, the inert mass and propellant mass was evaluated without considering the pressurization system or the reaction control thrusters with their tanks to find which system would be the most mass and space efficient in general. The masses and dimensions of the propulsion systems were found using basic rocket relations and the following equations as drawn from Dr. Akin's notes on "Mass Estimating Relations and Budgeting".

When using the formulas above, the following masses and propellant tank diameters are found as seen in table 9.6.2. The first engines to be eliminated were the RL10A-4 and RL10A-5. The inert mass and tank diameters for these systems were much higher than calculated for the engines using storable propellants. Of the remaining four systems, the Aestus II and RS-72 were first eliminated. Both use a gas generator (open) cycle, which is less efficient than a pressure fed system. Three to seven percent of the propellant is used in the gas generator to drive turbines to pressurize the propellant tanks.[122] Any "working fluid" is discharged either into the supersonic part of the nozzle or overboard.[123] The system is also complicated, increasing the possibility of malfunction.

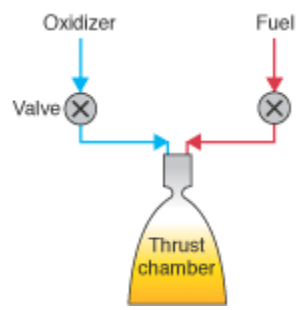


**Fig. 9.5.1[15] Diagram of Pressure Fed System**

The Aestus and the space shuttle orbital maneuvering engine (OME) both use a pressure fed system as seen in figure 9.6.1. This system has the advantages of being simple, reliable[122] and cheap.[123] However, the propellant tanks must be able to handle a pressure that is greater than the pressure seen in the thrust chamber.[124]

---

[119] Sutton, George P.. Rocket Propulsion Elements. 7th. New York: John Wiley & Sons, Inc., 2001.
[120] Sutton, George P.. Rocket Propulsion Elements. 7th. New York: John Wiley & Sons, Inc., 2001.
[121] Akin, David. "Mass Estimating Relationships." Principles of Space Systems Engineering. 04 Oct 2005. University of Maryland. 2 May 2006 <http://spacecraft.ssl.umd.edu/academics/483F05/483L09.MERs/483L09.MERs.2005.pdf>.
[122] Emdee, Jeff. "Launch Vehicle Propulsion." Crosslink 03(2004) 02 05 2006 <http://www.aero.org/publications/crosslink/winter2004/03.html>.
[123] Class Notes from Dr. David VanWie
[124] Class Notes from Dr. David VanWie

Table 9.5.2. Analysis of Considered Engines

| Engine | Propellant Mass (Kg) | Tank Diameter (m) | Inert Mass (Kg) | Propulsion System (Kg) |
|---|---|---|---|---|
| Aestus | 749.43 | 0.875 | 447.4 | 1196.83 |
| Aestus II | 719.84 | 0.865 | 474.94 | 1194.8 |
| RS-72 | 717.41 | 0.86 | 487.23 | 1204.7 |
| Shuttle OME | 767.74 | 0.86 | 417.68 | 1185.42 |
| RL10A-4 | 565.39 | 1.18 | 1597.06 | 2162.45 |
| RL10A-5 | 695.92 | 1.2 | 1546.87 | 2242.79 |

In the end, the space shuttle OME was chosen as the main thruster for thrusting the payload close to the station. The dimensions are slightly smaller than the dimensions of the Aestus, the propulsion systems has slightly less mass, and NASA already has experience with it since it is an integral part of every NASA shuttle.

### *9.6.2 Reaction Control Thrusters*

Once the main engine was chosen, reaction control thrusters were picked. A small reaction control system is necessary for slowing the vehicle to a stop and for small course or attitude corrections during the initial movement of the vehicle. The engines need to be small and have sufficient thrust to slow down the vehicle within 75 meters while minimizing the angular velocity of the vehicle. Thrust was evaluated using the following relationship

$$T = \frac{mV_o}{2nX_{stop}} \tag{9.5.1}$$

where T is the thrust in Newtons, m is the mass of the vehicle in kilograms including propulsion, $V_o$ is the initial velocity of the vehicle in meters per second as it approaches the station area (0.1m/s), n is the number of engines used to slow the vehicle down, and $X_{stop}$ is the distance in meters in which the vehicle must stop. The angular velocity was calculated using the following equation.

$$\omega = \frac{2Td}{I} t_{\min} \tag{9.5.2}$$

T is the thrust in Newtons, d is the distance the thrusters are from the center of mass, $t_{min}$ is the minimum pulse length for the thrusters (about 0.1 seconds), and I is the moment of inertia (Kg · $m^2$).

The American made Marquardt R6-C thrusters were chosen for the reaction control system. Part of the reason these were selected is because they have the same pressure feed system and propellants as the OME for the main thrust procedures.[125] The length and diameter are also small (see table 9.6.3), which is necessary for minimizing the area of the payload fairing allotted for propulsion. The thrust is more than sufficient to slow down the vehicle. Using equation 9.6.1, the necessary thrust to stop the vehicle in 75 meters is approximately 16 N. Two engines will be used at any time in any direction. Therefore, the maximum thrust available at any point

[125] Wade, Mark. Astronautix. 2005. 02 05 2006 <http://www.astronautix.com >.

during the mission is 66 N. The resulting angular velocity calculated using equation 9.6.2 is $7.19X10^{-5}$ radians per second. The propellant mass was budgeted to be three times the amount needed to stop the vehicle. The extra propellant can be used for mid-course corrections as well as any other maneuvering procedures that may become necessary during the construction process.

Table 9.5.3: Marquardt R6-C Statistics and Analysis

| Oxidizer | Fuel | Engine Cycle | Average Thrust (N) | Mixture Ratio | Isp (sec) | Engine Mass (Kg) | Engine Size: Length / Diameter (m) | Propellant Mass (Kg) | Tank Diameter (m) |
|---|---|---|---|---|---|---|---|---|---|
| $N_2O_4$ | MMH | Pressure Fed | 33 | 1.6 | 290 | 1 | 0.25 / 0.056 | 4.65 | 0.16 |

***Pressurant Tank Design***

Once the main and reaction control thrusters were chosen, the pressurant tanks had to be designed, and the mass of the tanks and pressurant accounted for. One pressurant tank is used each for the OME and for the R-6C. The volume of the pressurant can be found using equation 9.5.3. $V_p$ is the volume of the pressurant, for which helium is being used. $V_f$ is the volume of the fuel, and $V_p$ is the volume of the propellant. $P_m$ is the minimum acceptable propellant tank pressure, and $P_p$ is the pressure of the pressurant tank.

$$V_P = P_m \frac{V_f + V_o}{P_p - P_m} \qquad (9.5.3)^{126,127}$$

The pressurant mass can be found using equation 9.5.4.

$$M_p = \frac{P_P * V_P}{R * T_P} \qquad (9.5.4)^{128,127}$$

$M_p$ is the mass of the pressurant in kilograms and $T_P$ is the temperature of the gas, which is kept close to standard atmospheric temperature (298 K). R is the universal gas constant for hydrogen. The mass of the pressurant tanks are approximately equal to twice the mass of the pressurant (Akin's notes). The masses and volumes related to the pressurant tank design can be seen in table 9.5.4.

Table 9.5.4. Pressurant Analysis of Propulsion System

| Engine | Mass Pressurant (Kg) | Mass Pressurant Tank (Kg) | Volume Pressurant Tank ($m^3$) | Diameter Pressurant Tank ($m^3$) |
|---|---|---|---|---|
| OME | 1.94 | 3.88 | 0.037 | 0.41 |
| R-6C | 0.012 | 0.024 | 0.0003 | 0.083 |

[126] Sutton, George P.. Rocket Propulsion Elements. 7th. New York: John Wiley & Sons, Inc., 2001.
[127] Class Notes from Dr. David VanWie
[128] Sutton, George P.. Rocket Propulsion Elements. 7th. New York: John Wiley & Sons, Inc., 2001.

The final inert mass of the total propulsion system described above is 436.41 Kg. The total propellant mass is 774.95 Kg, and the total mass of the propulsion system is therefore 1204.8 Kg.

All of the propellant and pressurant tanks are designed to be spherical to minimize the length of the propulsion system. The tanks will be placed adjacent to each other enclosed within a fairing with a diameter of 2.22 meters and a height of 0.86 meters. The main thruster will extend down from the center of the fairing and be placed vertically along the center-line of the payload. It will be attached to a thrust structure (not shown here) that will then be attached to the payload.

The reaction control thrusters will be placed in two groups of four. The groups will be arranged such that the engines are rotated 90º from each other in the same plane (see figure 9.6.2). Each set will be located on the end of an arm that will extend from adjacent to the top of the fairing. The arms will be 1.5 meters in length and fold down against the fairing and OME during launch to c

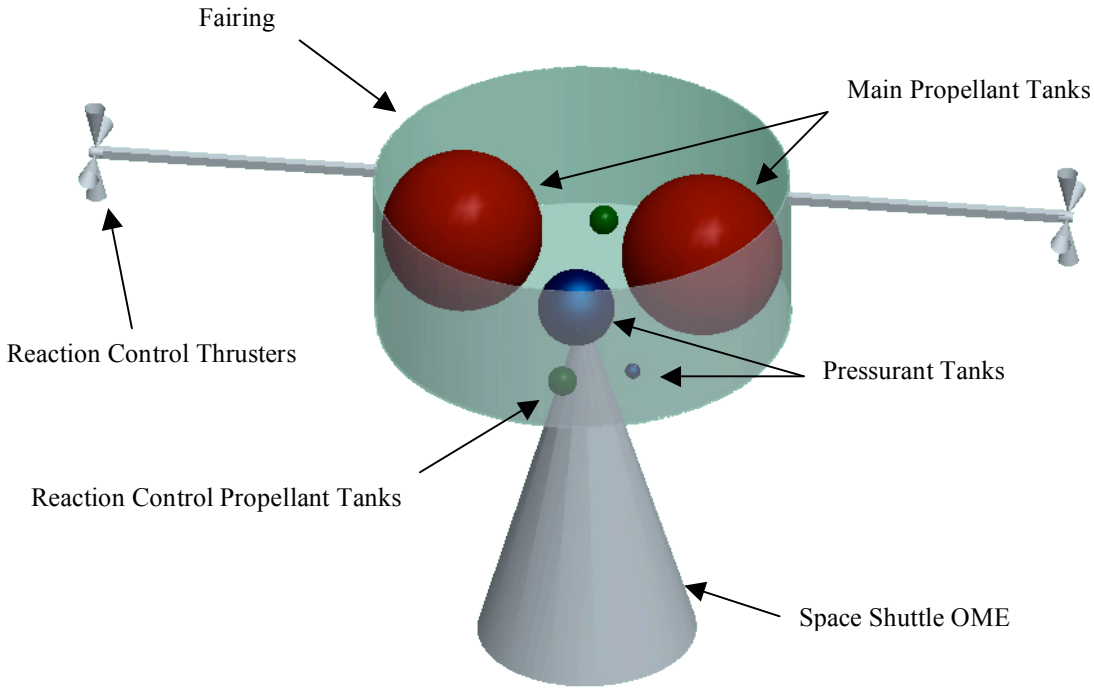


**Figure 9.5.2.** [129]

## 9.6 Robotic Assembly (Carroll)

Assembling SSP will be a very arduous task. Thus, robotic assistance would be critical to the overall time and cost of construction. There were many different possibilities for using robotic

[129] Megan Meehan's Pro E model

assistance, but the two most striking were the Mobile Servicing System (MSS) and the European Robotic Arm (ERA).

### *9.6.1 Mobile Servicing System*

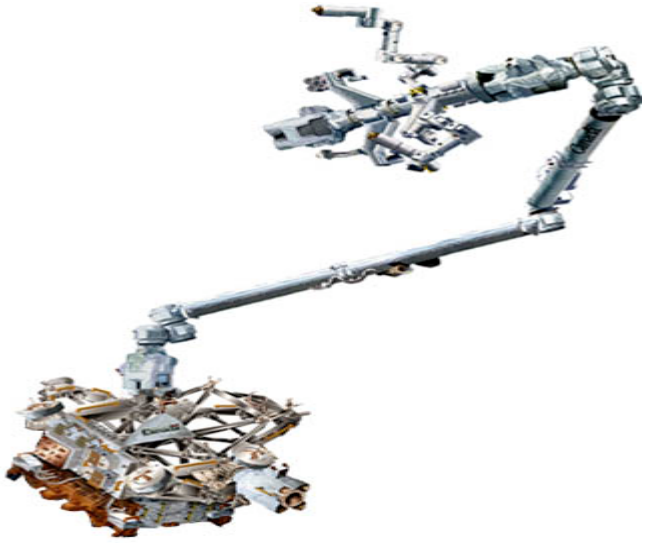

***Fig. 9.6.1: Mobile Servicing System***

The Mobile Servicing System consists of three main subsystems. The first is the mobile base system, which gives the MSS its lateral mobility. The base system is key in supporting the arm and hand of the MSS. It will move along the aluminum rails of the main trusses of SSP. The second and most critical subsystem is the Remote Manipulator System, or the Canadarm2. In addition to being able to move with the base system, either end of the RMS can be anchored by a Latching End Effector while the other end is free to perform whatever task necessary at the time[130]. Placing these power data grapple fixtures around the station will allow the RMS to move end over end and effectively "walk" around the station. The PDGF's will provide the RMS with the required power and also a computer and video link to the crew members inside the station. The third and final subsystem of the MSS is the Special Purpose Dexterous Manipulator. This subsystem was designed to perform the more delicate tasks that previously could have only been accomplished by EVA. The MBS has four grapple fixtures which will act as a base to both the RMS and the SPDM at the same time. These three components have been engineered to work together or independently, whichever is needed[131]. Since the RMS can move very large payloads at a time, it will be used to maneuver the modules, loaded or unloaded, and place them where they need to be for construction purposes. Furthermore, since the SPDM can perform very delicate tasks, it will be used to decrease the number and duration of astronaut EVAs during the construction and maintenance of the station. The only drawback is that this system is operable only in zero-gravity conditions. Table 9.7.1 shows a table of mass, power, and handling capacity broken down into subsystems[132].

### *9.6.2 European Robotic Arm*

The European Robotic Arm, like the RMS will be able to move end over end attaching to power data grapple fixtures. Each fixture will have the capability of relaying data and video signals to the astronauts, and also provide the ERA with its power. The ERA's handling capacity is much less than the RMS, so its main function will be to install and service the solar arrays and radiators. It will be able to transport smaller payloads from inside the station to wherever needed on the outside. Moreover, the ERA will assist in EVA activities, which will greatly reduce the

---

[130] "Canadarm 2." MD Robotics. 11 APR 2006 <http://sm.mdacorporation.com/what_we_do/ssrms.htm>.
[131] "Mobile Servicing System (MSS)." Canadian Space Agency. 14 APR 2006 <http://www.space.gc.ca/asc/eng/iss/mss.asp>.
[132] "Space Station Assembly." 03 MAR 2003. NASA. 14 APR 2006 <http://spaceflight.nasa.gov/station/assembly/elements/mss/subsystems.html#compare>.

duration and risk involved in such a task. The "home base" for the ERA will be on the Russian Multipurpose Laboratory Module, which both are set to be launched in 2007. Table 9.7.1 shows a table of mass, power, and handling capacity of the ERA[133].

Table 9.6.1: Mass, Power, and Handling Capacity of Robotic Systems

| | Base System | RMS | SPDM | ERA |
|---|---|---|---|---|
| Length | 5.7 m x 4.5 m x 2.9 m | 17.6 m | 3.5 m | 11.3 m |
| Mass | 1,450 kg | 1,800 kg | 1,662 kg | 630 kg |
| Peak Power | 825 W | 2,000 W | 2,000 W | 800 W |
| "Stay Alive" Power | 365 W | 435 W | 600 W | 475 W |
| Handling Capacity | 20,900 kg | 116,000 kg | 600 kg | 8,000 kg |

### *9.6.3 Benefits of Robotic Assistance*

Using these robotic systems to aid in the construction of SSP is an incredible help to us. Both of these systems in their entirety will already be in place of the ISS when the assembly of SSP begins. This means that there will be no added costs due to research and development, nor will there be any cost incurred from launching materials. In addition, these systems will provide us with the means necessary to take apart the ISS and re-assemble the modules for our purposes. The MSS will be the driving force in moving the large modules, while the ERA will be responsible for smaller payloads, such as solar arrays and radiators. Furthermore, the assistance of robots will support the astronauts on EVAs which will significantly increase the safety and productivity of the astronauts.

## 9.7 Unused ISS Components (Eckert)

The overall goal of SSP is to make the most use of existing ISS hardware to create a new station for performing Mars mission simulations. During the design of SSP every ISS component was evaluated for its usefulness. Based on this, only a few ISS components were deemed unusable. The current SSP configuration uses 79 % of the existing ISS hardware upon completion.

[133] "ERA: European Robotic Arm." International Space Station Human Flight and Exploration. 04 APR 2006. European Space Agency. 11 APR 2006 <http://www.esa.int/esaHS/ESAQEI0VMOC_iss_0.html>.

Table 9.7.1 Unused ISS Components

| Module | Mass (kg) | Justification for discarding |
|---|---|---|
| Zarya | 19,300 | Not required, used to deorbit ISS trash |
| Z1 Truss segment | 8,755 | No use in current configuration |
| Port Photovoltaic Array | 21,600 | Substantial decrease in power production |
| Starboard Photovoltaic Array | 21,600 | Substantial decrease in power production |
| Pirs | 3,630 | Usable life of 5 years, shortest of any module |
| Radiators | 9,720 | Substantial decrease in effectiveness |
| JEM-RMS Large Arm | 370 | Not designed for operation in gravity |
| JEM-RMS Small Fine Arm | 75 | Not designed for operation in gravity |
| JEM-Exposed Facility | 13,000 | Not designed for operation in gravity |
| JEM-Exposed Section | 2,700 | Not designed for operation in gravity |

Table 9.7.2 Percentage of ISS reused

| | |
|---|---|
| Total Unused ISS (kg) | 100,750 |
| | |
| Completed ISS (kg) | 456,000 |
| Reused ISS Components (kg) | 360,000 |
| Percentage of ISS reused | 79% |

## 9.8 Deorbit of Unused ISS Parts (Brookman)

### *9.8.1 Overview*

While a large portion of ISS is reused in SSP, some material will need to be de-orbited. This includes unused payload racks featuring out-of-date experiments, hardware not used in SSP, ISS solar arrays, and miscellaneous items. The solar arrays and radiators will be destroyed by manual jettison (either by human or robotic assistance) into lower orbit for re-entry into Earth atmosphere. Remaining equipment will be attached to or placed inside of Zarya for containment during SSP construction and until de-orbit. A fully loaded Zarya module has mass 19,300 kg. With all unused ISS material attached to and contained within Zarya, a total mass of 48,000 kg will need to be de-orbited.

### *9.8.2 Original Option*

Original consideration for de-orbit trajectory was based on the Russian Mir de-orbit strategy.[134] Drag due to upper atmospheric interference would reduce the orbit to 220 km altitude, where a propulsion system would burn to 165 km × 220 km altitude orbit. These orbit dimensions are based on the Mir trajectory. From there, the propulsion system would burn into a re-entry ellipse featuring an 83 km altitude perigee. Earth atmosphere is dense enough at this altitude to bring

[134] "The Final Days of Mir." Center for Orbital and Reentry Debris Studies. The Aerospace Corporation. 15 Apr 2006 <http://www.reentrynews.com/Mir/sequence.html>.

the station remnants to full re-entry trajectory. The process would be timed to have leftovers land in an uninhabited area of the ocean, away from islands and shipping lanes. Total $\Delta V = 41$ m/s. This process was deemed complicated, due to the time it takes to wait for the orbit to reduce in altitude due to drag and the need for propulsion system restart. There was fear that the unused ISS parts could hit SSP (or come dangerously close) while the orbit is decaying to 165 km × 220 km.

### *9.8.3 Second Option*

A second iteration remained based on the Mir de-orbit strategy. Instead of waiting for drag to reduce the orbit, a propulsion system would burn from ISS orbit directly to 165 km × 220 km altitude orbit. From there, the system would burn to a re-entry trajectory with perigee of 83 km altitude, where the atmosphere takes over and brings the material to zero altitude. As with the first option, the trajectory would be timed to aim for landing in an unpopulated ocean area. Total $\Delta V = 113$ m/s. This process was deemed complicated due to need for propulsion system restart and unnecessary transfer orbits.

### *9.8.4 Final De-orbit Trajectory*

The current and final iteration involves a direct transfer from ISS and SSP orbit into 349 km × 83 km orbit. The final perigee altitude is maintained in this strategy, but only one burn is necessary. Total $\Delta V$ for the destructive de-orbit maneuver is $\Delta V$=75 m/s.

## 9.9 Maneuvering Propulsion for De-orbiting Unwanted ISS Material (Schroeder)

The same engines and reaction control thrusters were chosen for the propulsion system used in de-orbiting unwanted material from the International Space Station (ISS) as for maneuvering the launched payload. The analysis and trades study for the engines, as well as the design of the overall propulsion system can be seen in section 9.10. The payload, in this case, is approximated as 48,000 kg and is de-orbited at a delta-V of 75 m/s (see section 9.8.4). Therefore, the tank dimensions, as well as the mass of the propellant and pressurant, increased slightly, as can be seen in tables 9.9.1 and 9.9.2. The configuration of the propulsion system is also the same as in the system used for moving launched payload (see fig. 9.5.2).

Table 9.9.1. Analysis of De-orbit Propulsion

| Total Inert Mass (Kg) | Total Propellant Mass (Kg) | Total Mass of Propulsion System | Main Propellant Tanks Diameter (m) | Reaction Control System Propellant Tanks Diameter (m) |
|---|---|---|---|---|
| 488.31 | 1195.1 | 1683.4 | 1 | 0.156 |

Table 9.9.2. Analysis of De-orbit Pressurant

| Engine | Mass Pressurant (Kg) | Mass Pressurant Tank (Kg) | Volume Pressurant Tank ($m^3$) | Diameter Pressurant Tank ($m^3$) |
|---|---|---|---|---|
| OME | 2.99 | 5.99 | 0.057 | 0.48 |
| R-6C | 0.012 | 0.024 | 0.0003 | 0.083 |

## 9.10 Spacecraft Design (Azariah, Schroeder)

### *9.10.1 System Configuration*

System consists of a propulsion module (PM) and a payload bundle (PB).

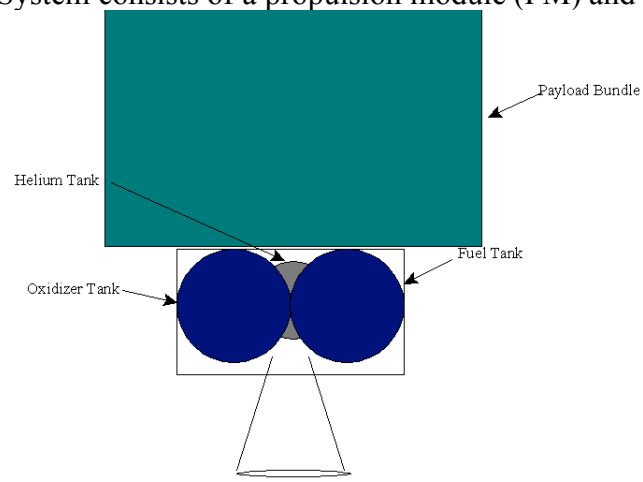


by Mari Schroeder

Fig. 9.10.1

### *9.10.2 Spacecraft Subsystem Design*

#### 9.10.2.1 Structure

Payload bundle cone is 11m in length and 4.6m in diameter. It houses most of the avionics equipment.
Spacecraft structure is composed of exterior cylinder with top and bottom plates, mounting points for subsystems, antenna support structures, and thermal shield.

#### 9.10.2.2 Thermal Control

A detailed thermal design and thermal analysis was not performed and requirements of the payload module especially since different payloads might require additional protection. However, separate sensor thermal control analyses were performed and are included with other sensor information.

#### 9.10.2.3 Attitude Control Sensors

A star tracker would be used for initial attitude control this should allow target (SSP) pointing accuracy of 0.01 deg. There will be four star tracker heads, mounted in pairs on the outside of the thermal shield. Only two are nominally operational the others serve as backup. Each has a 22 by 16 degree field of view and can provide attitude knowledge of about 2 arcsec in two axes and 16 arcsec in their boresight roll axis.

**Table 9.10.1: Star tracker specifications table**

| | |
|---|---|
| Update rate | 1Hz |
| Tracking rate | 0.2°/s – 3.5mrad/s |
| Number of stars tracked | <~ 50 |

| | |
|---|---|
| Tracking sensitivity | 7.5mv |
| Guide stars in database | 5650 |
| Auxiliary stars in database | 22600 |
| Communications | I/F 1553 or RS 422 |
| Operating temperature | −30° to +50° C |
| Radiation tolerance | 1kJ/kg |

| name | # of units | mass/unit (kg) | Total Mass (kg) | Power/unit (W) |
|---|---|---|---|---|
| star tracker | 4 | 0.25 | 1 | 5 |
| processing | 2 | 1.5 | 3 | 3 |
| | | | | |
| **TOTALS** | | | **4 kg** | **13 W** |

| name | # of units | mass/unit (kg) | Total Mass (kg) | Power/unit (W) |
|---|---|---|---|---|
| sun sen | 2 | 2 | 4 | 3 |
| processing | 2 | 1.5 | 3 | 3 |
| | | | | |
| **TOTALS** | | | **7 kg** | **9 W** |

| name | # of units | mass/unit (kg) | Total Mass (kg) | Power/unit (W) |
|---|---|---|---|---|
| LADAR | 2 | 2 | 4 | 8 |
| processing | 2 | 1.5 | 3 | 3 |
| | | | | |
| **TOTALS** | | | **7 kg** | **18 W** |

| name | # of units | mass/unit (kg) | Total Mass (kg) | Power/unit (W) |
|---|---|---|---|---|
| inertial sens | 4 | 0.25 | 1 | 5 |
| processing | 2 | 1.5 | 3 | 3 |
| | | | | |
| **TOTALS** | | | **22 kg** | **53 W** |

Interferometer is just a set of GPS receivers positioned along the body of the spacecraft with known distances. Those distances and the angle between the line of sight to the GPS satellite and the line joining the two antennas are used to calculate attitude.

### *9.10.3 On-board data handling*

#### 9.10.3.1 Processor and data interfaces

Spacecraft includes a computer comprised of a payload processor plus the associated peripherals, which performs all payload management functions as well as implementation of the attitude control. The system chosen is the RAD6000-SC computer which is a radiation hardened version of the IBMRS/6000 processor developed for the Mars Surveyor Program.
The nominal performance is 22 MIPS, computer contains 128 Mbytes of DRAM and 3 MBytes of PROM. The relatively low data rates for navigation and telemetry permits all data to be buffered and stored in DRAM. This eliminates the need for a separate mass memory board, thereby reducing the subsystem mass and power.
Two computers will provide two-fault tolerance, satisfying level one requirements. The system consists of two identical units operating in a "String A and a String B fashion". String B acts as a backup and receives state data from String A at specified intervals. String B will contain a timer to monitor String A. If this timer runs out, String B will take over. The computer component cards will be mounted in a VME chassis.

**Table 9.10.2: Table of specifications**

| | |
|---|---|
| Processor type | RAD6000-SC, floating point included |
| RAM | 128Mbytes radiation tolerant DRAM |
| Nominal performance | 22 MIPS at 10.5W (21.6 SPECMark) |
| Mass | < 0.9 kg |
| Temperature range | −30 to +75 C |
| Memory protection | on chip EDAC as well as system level EDAC |
| SEU bit error rate | 4/MFC/year GCR (Galactic Cosmic Rays) |
| Processor total dose | > 20 kJ/kg Total Ionizing Dose (TID) |
| DRAM total dose | > 0:3 kJ/kg (TID) |

| UNITS | # | mass (kg) | Power/unit (W) |
|---|---|---|---|
| Processor | 2 | 2.3 | 10.5 |
| X-strap board | 2 | 1.8 | 0.75 |
| 1553 board | 2 | 1.8 | 1 |
| RS422 board | 4 | 1.8 | 2 |
| VME chassis | 2 | 1.8 | - |
| Shielding | - | 1 | - |
| **Totals** | | **10.5 kg** | **14.25 W** |

#### 9.10.3.2 Data interfaces

The data interfaces between the subsystems and the spacecraft use a MIL-STD-1553 data bus to link all of the hardware elements to the processor, with the exception of the accelerometers which are directly linked to the processor via an RS 422 interface. The processor is linked to the spacecraft processor via the 1553 bus.

#### 9.10.3.3 Bus control

The MIL-STD-1553 protocol requires no more than one bus controller.
Initially, the spacecraft processor is the bus controller for attitude control. After the payload processor (nominally String A) is brought on line, bus control is transferred from the spacecraft processor to the payload processor. This is accomplished by a “dynamic bus control" command which is available within the framework of the 1553 standard.

#### 9.10.3.4 Command and data handling

The payload command and data handling (C&DH) software layer resides on the payload processor. It will include the 1553 interface and data structures for normal operations, plus the RS 422 interface to communicate with the accelerometers. The command handler accepts and sends commands either directly from the 1553 interface, or as stored program commands loaded into the payload processor memory. These program commands may be time tagged with absolute or relative time, or may be conditional commands. The spacecraft computer controls the telemetry accepts or sends data packets to and from the payload processor as commanded by the payload C&DH layer. The spacecraft controller will perform the command and data handling functions, attitude determination, and control functions as well as processing data. Power to the controller will also be supplied by the spacecraft.

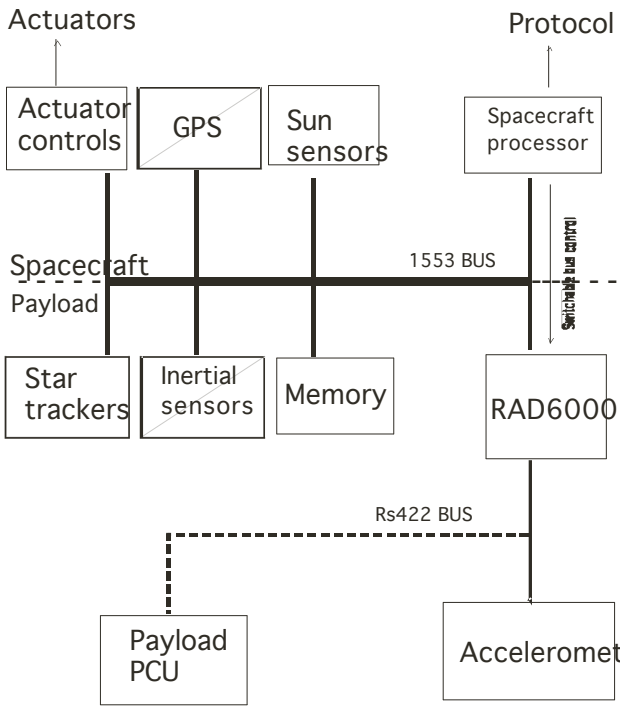


Payload data interfaces

### *9.10.4 Tracking, telemetry and command*

#### 9.10.4.1 Antenna trade study

The TT&C functions will be provided by an X-band telecommunications system, consisting of transponders, a Radio Frequency Distribution Unit (RFDU) and antennas. The transponder

subsystem features two basic transponder units, each with its own solid-state power amplifier. The transmitters can be switched on and off by telecommand.

The RFDU is used to control the routing of telecommand and telemetry data between the two transponders and the antennas. The signal routing provides redundancy for both telecommand and telemetry functions. Two steer-able high-gain antennas configured on top of the spacecraft will be used. They will have a 30 cm diameter and a nominal bore-sight gain of 25 dBi. To obtain the required omni-directional coverage for telecommand, two low-gain antennas are mounted on opposite sides of the spacecraft. With 5W transmitted RF power, the high-gain antennas allow for a telemetry rate of 375 bps.

However simple omni-directional antennas could just as easily be used. They radiate and receives equally well in all directions. This types of antennas are also lightweight, usually less than 2kg for LEO satellites applications. However, they do have a significant drawback – high power requirements. But for our purposes bandwidth of 200-300 kHz will be sufficient and this reduces the power requirements to 30-60 W.

Conclusion: 4 omni-directional antennas will be mounted on the spacecraft. They will be mounted in the front and (¾ ) * L along the body of the spacecraft. This placement shold prevent damages do the antennas from the propulsion system, but if the damage still occurs the 2nd set is redundant.

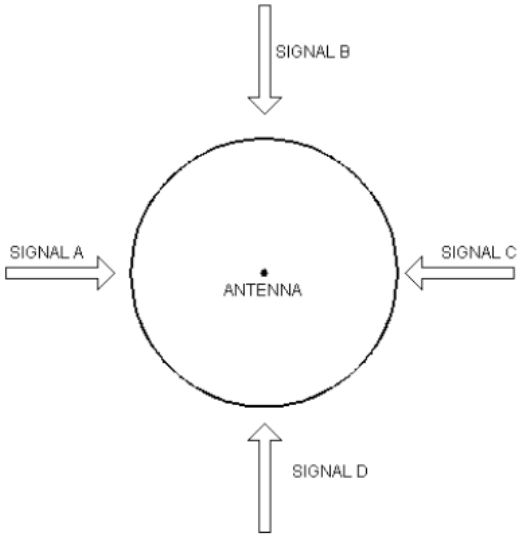


FIGURE 1

### *9.10.5 Power subsystem*

A more precise trade study should be conducted between solar array and battery power. However, assuming that the transfer time is short (< day) it is beneficial to just use battery power. If mass and/or power requirements will not permit this then solar arrays will be used.

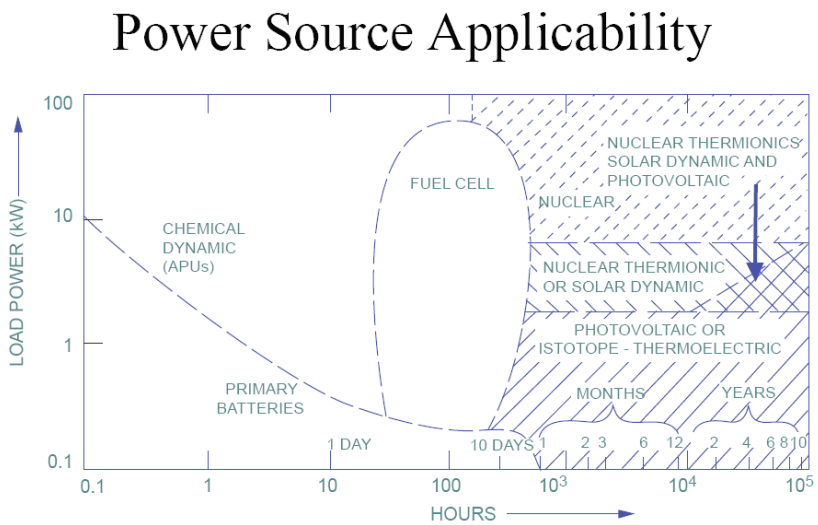


GaAs solar cells with 19 percent efficiency are used for power generation. The batteries are of the Lithium-ion type, providing 80 Whr/kg specific energy density and 140Wh/l volumetric density. The spacecraft power requirements with contingency are 195.7W. A secondary battery will provide fault protection during flight. A 20 Ahr Li-Ion 27V battery with mass and volume 5.9 kg and 3.4 l respectively will be used.

### *9.10.6 Thrusters*

Control Devices Analyszed

| Control Device | Power (W) | Mass (kg) |
|---|---|---|
| Momentum Wheel | 1-10 | 0.3-1.3 |
| Control Moment Gyros (CMG) | 90 | >10 |
| Gravity Gradient | 0 | 0 |
| Magnetic Torquer | 0.25-9.2 | 0.3-8.5 |
| Reaction Wheel | 1-10 | 0.3-3 |
| Cold Gas Thruster | 1.2-6 | 0.08-0.15 +fuel |

Since only small bursts of thrust are required for attitude control, pointing and braking cold gas systems were used. Cold gas thrusters produce small amounts of thrust, typically 5 N or less and are useful for small spacecraft and for fine attitude control. They are also very simple and reliable. Hot gas thrusters on the other hand will be problematic for our purposes because they have a time dependent thrust profile.

### *9.10.7 Mass and Power budgets*

| | Mass | Power |
|---|---|---|
| | (kg) | (W) |
| Payload | 230000 | 72.2 |
| Payload Shield | | |
| Structure | | |
| Thermal | | |
| Propulsion | | |
| Telecomunication | 9.9 | 26.4 |
| Data Handling | 14.5 | 13.1 |
| Power Subsystems | 12.2 | 14.8 |
| Cabling | 15.1 | |
| Total | 230057.7 | 128.6 |

# X. Contingency Planning

## 10.1 SSP Emergency Atmospheric Life Support Provisions (Chandra)

### *10.1.1 Emergency Oxygen Generation*

1. In the event that the OGS encounters failure, there is an auxiliary OGS unit located on the opposite townhouse. The water provision for the OGS system includes a 1.15 safety factor and an emergency 28 day supply of water for oxygen generation.

2. In the event that both OGS suffers failure on both townhouses, there is a 28 day supply of oxygen generating perchlorate ($LiClO_4$) "candles" stored on SSP. Each candle provides one crewmember with oxygen for one day.[51] Each candle weighs 12.2 kg and has a volume of 0.012 $m^3$. For six crewmembers, 168 candles (2100 kg, 2.016 $m^3$) is a 28 day emergency supply. The candles located in storage racks on Node 3 of Townhouse A and B.

3. An immediate option for $O_2$ is from the Portable Breathing Assembly (PBA) (Figure 10.1.1). Used on the ISS, the PBA consists of a full face mask attached to a 15 minute bottle of $O_2$.[50] The PBA is utilized whenever a hazardous atmosphere alarm arises, such as a fire or cabin decompression. There are 18 PBA units on SSP, each positioned in a centralized location and in sufficient quantities for any of the six crew members to reach quickly in an emergency: 6 are located on Townhouse A (permanent), 6 are located on Townhouse B (permanent), and 6 are designated for mandatory possession by crew members traveling between the Inflatable Transfer Tubes.

Figure 10.1.1: PBA
Credit: Whitaker, Overview of the ISS US Fire Detection and Control System

### *10.1.2 Emergency $CO_2$ Removal*

1. In the event that the ARS encounters failure, there is an auxiliary ARS unit located on the opposite townhouse.

2. If both townhouse ARS units suffer failure, SSP carries a 28 day emergency complement of lithium hydroxide (LiOH) canisters that absorb $CO_2$ and other trace contaminants once activated. 2.1 kg of LiOH will absorb 1 kg of $CO_2$.[51] A 28 day supply of 12 kg canisters is 360 kg and 0.360 $m^3$. The LiOH canisters are stored on life support storage on Node 3 of

Townhouse A and B. Canisters are also used when a large amount of $CO_2$ exists within in the cabin, such as after a fire (as not to overtax the ARS system).

## 10.2 Cabin Atmosphere Emergencies (Chandra)

Safety is an absolute paramount concern when it comes to any form of space habitation, and Space Station Phoenix is designed to maximize crew safety and provide for means of detecting and dealing with the most dire cabin atmosphere emergencies. Since 79% of SSP is composed of material from the International Space Station, many of the same safety systems and sensors have been adapted for use on SSP in order to avoid the costs of designing and launching new systems. A further consideration is also considered: the zero-partial-full gravity environment that encompasses the duration of the SSP mission. Special consideration to the gravity environment is crucial when it comes to emergencies dealing with the nature of fire aboard the station.

All crew emergency systems are designed under the guidelines set forth in NASA document STD-3000, Man-Systems Integration Standards.[135] The major emergency safety systems integrated throughout SSP are:

1. Caution and Warning System (CWS)
2. Fire Detection and Suppression (FDS)
3. Cabin Depressurization Detection and Remediation (CDD)

### *10.2.1 Caution and Warning System*

The crew aboard SSP is alerted to a hazardous cabin environment condition through the use of the Caution and Warning System (CWS). This is central sensor monitoring system that is controlled through panels located in each module/node, as well as through software on crew member personal computers. The CWS monitors fire, trace contaminant, and pressure sensors throughout the SSP cabin, and alerts crew members to an abnormal sensor reading. The CWS system was used on the ISS and is adapted for use on SSP. On each module panel (Figure 10.2.1), there are six buttons which are automatically activated by cabin sensors, or pushed manually by crew members to signal the following emergencies:

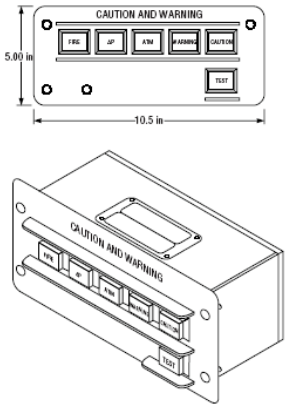


**Figure 10.2.1: C&W Panel**
Credit: NASA/TM-1998-206956

1. Adverse change in cabin pressure
2. Fire warning
3. Contaminated Atmosphere
4. General Caution
5. General Warning
6. System Test/Reset

[135] NASA-STD-3000. Man-System Integration Standards. Revision B. NASA, 1995.

The activation of the CWS leads to the activation of an audible and visual alarm system, as well as appropriate automatic emergency responses. Activated sensor information is sent to the personal computer systems of crew members to indicate the nature and location of the emergency. All CWS panels are colored aviation red in accordance with STD-3000 and MIL-STD-25050.[135] It is important to note that any alarm from a CWS requires the immediate donning of a PBA by each crew member as per ISS/SSP protocol.[138]

### *10.2.2 Fire on the SSP*

Fire is one of the most feared events that can occur within a pressurized space habitat. The first step in decreasing the risk aboard the ISS (and in turn SSP), was for designers to make the ISS a two gas atmospheric system. By keeping the $O_2$ and $N_2$ levels at Earth atmospheric percentages of 21% and 79% respectively, the fire hazard is reduced, but not eliminated.[135] Furthermore design considerations aboard the ISS with respect to design materials, such as those with high ignition temperatures, slow combustion rates, and low explosion potentials were used, which in turn became recycled for use aboard SSP.[136]

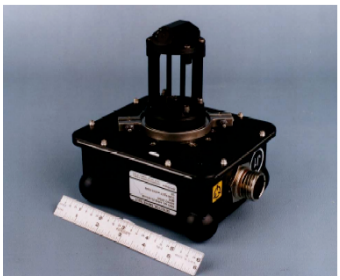

**Figure 10.2.2: SSP Photoelectric Smoke Detector**
Credit: *Image: Whitaker,* Overview of ISS U.S. Fire Detection and Suppression System , JSC

Table 10.2.1. SSP Smoke Detectors

| | Unit | Total (30) |
|---|---|---|
| **Mass** | 1.5 kg | **45.0 kg** |
| **Volume** | 0.003 $m^3$ | **0.090 $m^3$** |
| **Power** | 1.48 W | **44.4 W** |

The zero-partial-full gravity environment that SSP provides is an extremely important factor in the detection and suppression of fire since fire reacts differently in the various gravity environments. The major difference encountered is that in full gravity, the large amounts of heat released by the combustion of a fire result in density gradients that allow for buoyant convection flows that allow heat to rise.[137] In zero gravity, there is no convection, thus heat and any resulting flames burn in a homogeneous manner. This also characterizes the behavior of smoke, and provides for a basis of detecting fire in the various levels of gravity. The following subsystems constitute the Fire Detection and Suppression System aboard SSP.

### *10.2.3 Fire Detection aboard SSP*

Throughout SSP, the IMV system maintains the cabin airflow between 0.07 and 0.20 meters/second in order to both provide fresh atmosphere to any part of the cabin and at the same time removing any atmosphere contaminants. By nature of the movement of the forced airflow, this system counteracts the convection of heat and smoke in a partial and full gravity environment, as well as the homogeneous diffusion in a zero-gravity environment. Onboard the ISS, the method of fire detection is using photoelectric smoke detectors (Figure 10.2.2, Table 10.2.1) within the cabin ventilation system. The IMV system is connected to all racks within modules, and therefore any fire arising from electronics within racks can be instantly detected.[136]

---

[136] NASA/TM-1998-206956. Wieland, P. O. Living Together in Space: The Design and Operation of the Life Support Systems on the International Space Station. NASA Marshall Space Flight Center, Huntsville AL: NASA, 1998.
[137] Eckart, Peter. Spaceflight Life Support and Biospherics. 2. Torrance, CA: Utz; Microcosm Press; Kulwer, 1994.

Since the photoelectric smoke system is integrated into the existing ISS IMV setup, this is be the fire detection source used onboard SSP.

There are a total of 30 photoelectric smoke detectors aboard SSP, 16 of which were on orbit with ISS. 14 new units are integrated with newly launched modules as well as being placed in the IMV system in the townhouse connecting inflatable transfer tube.

The smoke detectors work on the principle of smoke particles that scatter a light beam. A laser is used to reflect a beam through mirrors to a photodiode. The sensing alarm within the detector is triggered when the voltage level generated by the photodiode is changed due to the obscuration of the laser by smoke. A signal is then sent to the CWS, which raises the SSP fire alarm.[138]

### *10.2.4 Fire Suppression aboard SSP*

In a closed space cabin environment, the standard procedure used by NASA to fight a fire is to immediately cut the fuel to the fire.[136] On SSP, this involves shutting off all inter-module ventilation to the fire are to stop the flow of atmospheric $O_2$ to the ignition source. Also the electrical power to the area of the fire is shut down in the case the ignition source is an electrical system. This is done automatically by the CWS, or it can also be accomplished manually by crew members.

To further extinguish a fire, many suppression systems were examined for use on SSP. These included $CO_2$ , Halon 1301, and water based suppressant systems. Due to its toxicity, Halon proved to be a hazardous option in a cabin environment, overpowering the TCCS subsystem.[138] Water mist systems were also considered an option, as they have been shown to be effective in extinguishing electrical fires in both full and microgravity environments.[139] Unfortunately, since SSP is using ISS components, the design, implement, launch, and installation of a new integrated water mist suppression system would be costly.

Table 10.2.2. Portable Fire Extinguishers

| | Unit | Total (12) |
|---|---|---|
| Mass | 6.8 kg | 81.6 kg |
| Volume | 0.04 $m^3$ | 0.48 m3 |
| Discharge Time | 45 sec | |

The existing suppressant method onboard the ISS is the $CO_2$ Portable Fire Extinguisher (PFE) (Table 10.2.2, Figure 10.2.2). To save launch mass on integration, the $CO_2$ PFE system will be used on SSP. These are crew operated 6.8 kg units that discharge $CO_2$ to essentially starve any fire of its $O_2$ source. It is standard procedure on board SSP to activate a LiOH canister to absorb the excess $CO_2$ from the cabin atmosphere.

There are 12 PFE's onboard SSP. They are strategically placed in centralized locations throughout the station to be easily accessible in the event of a fire. They are contained in a bright red Nomex sheath, and carry a needle nozzle that can reach inside standard payload racks for internal rack fire suppression.[138] The locations are as follows:

[138] Whitaker, Alana. Overview of ISS U.S. Fire Detection and Suppression System. NASA Johnson Space Center, Houston TX: NASA, 2001

[139] Abbud-Madrid, Lewis, Watson. Study of Water Mist Suppression of Electrical Fires for Spacecraft Applications. Center for Commercial Applications of Combustion in Space, Colorado School of Mines, 2004

- 3 PFE's on Townhouse A
- 3 PFE's on Townhouse B
- 2 PFE's on Inflatable Tube A
- 2 PFE's on Inflatable Tube B
- 1 PFE on Russian MLM
- 1 PFE on Zvezda

**Figure 10.2.3: PFE**
Credit: *Image: Whitaker,* Overview of ISS U.S. Fire Detection and Suppression System , JSC

### *10.2.5 SSP Cabin Depressurization Detection and Remediation*

In the event that an adverse pressure gradient is detected on SSP by pressure sensors (Figure 4) located in each module, the C&W system will be the first system to detect the emergency and warn the crew. Under existing NASA protocol, PBAs will be donned by crew members, and the section that contains the pressure leak will be sealed off by the crew and the IMV automatically cut off to the affected section.[136] Any repairs able to be made either using internal or external EVA options are at the discretion of Mission Planning/Control.

All sealed modules can be depressurized manually by the crew using cabin pressure bleed valves in outer hatches to 0.4 psia in the period of 24 hours. This option is present in the emergency that a contaminated atmosphere exists within a certain module and needs to be vented through the control of an adjacent unaffected module. The hatch control bleed valves can then be manually closed, and inter-hatch valves can be used to restore pressure (14.7 psia) to the effected module over a period of 75 hours.[136]

## 10.3 Safety Systems

### *10.3.1 Health Monitoring (Alvarado)*

The health of the crew on SSP will have to be monitored at all times by mission control for scientific purposes as well as making sure they are in the proper health to continue the mission. The health care system will monitor physiological characteristics, lung function, blood chemistry, tissue oxygenation, immune system function and the affects of atmospheric pressure[1]. The Human Research Facility Rack I will monitor the crew's health during exercise and at other times inside the station, and is currently located in the MPLM Donatello.

### *10.3.2 General Station Health Care and Supplies (Alvarado)*

Due to the mission of SSP being used to simulate a full duration Mars mission, the crew should also test whether or not adequate health care can provided without returning to Earth. In Donatello there is a medical bed, medical supplies and equipment to be used by the astronaut physician and in the case that he is ill, or injured, another member of the crew, that will have taken at least 6 months of training before the mission, will act as the crew medical officer. With the MPLM Donatello there will be medical supplies and a medical bed; this area will be the

center of health care on the station. The medical bed is an area where an ill astronaut may be kept if they need to be separated from the rest of the crew. It also doubles as an area for in-flight surgery if the need arises, a worst case scenario, and a mission can not be sent up to retrieve the individual to return Earth for treatment. Some of the key medical provisions are also ones used in military applications. There will be portable ventilators, physiological monitoring and cardiac support equipment as well as pharmaceuticals[4] on board SSP.

### *10.3.3 Medical Contingencies (Alvarado)*

SSP will have supplies for a various number of health emergencies to name a few: food illnesses, psychological, cuts, broken bones, respiratory problems, heart problems, and many other health problems. If an astronaut is not in a life threatening situation they can be treated on the station and this will help NASA learn how care may be administered during an actually Mars mission. If the astronaut's condition is severe then a rescue mission would be sent from Earth to retrieve the individual. In a worst case scenario the astronaut could be treated on SSP or the station could be evacuated in order to attempt to save the individual. These decisions will be decided by mission control with input of the crew on SSP.

## 10.4 Emergency Procedures (Marquart)

### *10.4.1 Evacuation/Rescue Mission*

Though back-up systems are in place to deal with minor environmental emergencies such as loss of pressure, fire, etc., more severe, unpredictable emergencies could require a station evacuation. ISS protocol requires that a vehicle (currently the Russian Soyuz) be docked to the station at all times while a crew is on board. Furthermore, this vehicle is to be replaced at least once per year. SSP will follow similar protocol, and require that a CEV be docked with the station at all times; an individual CEV will never remain docked to the station for longer than one year.

The station crew will arrive at SSP aboard a CEV. This CEV will remain docked to SSP and will serve as a "lifeboat" vehicle while the crew is on-board. During the construction and variable gravity phases of the mission, the crew will never be on the station for longer than a year, and therefore, they can depart on the same CEV upon which they arrived. During the Mars mission simulation phase, the crew will be aboard the station for almost three years, so at least two CEV exchange missions will have to take place.

While docked to the station, the CEV will be maintained flight-ready at all times, and an emergency evacuation can take place quickly if the situation arose. Since the CEV could be designed to land on both land and water, several immediate return windows occur on a daily basis. The CEV will also be capable of independently supporting a crew if the return mission was delayed.

If there was a problem with the onboard CEV, there is a chance that a rescue mission could be required. The following chart shows an estimated timeline for an SSP rescue mission:

| Table 10.4.1. Estimated SSP Rescue Mission Timeline | | |
|---|---|---|
| Operation | Time Required | Comments |
| Prepare Rescue Mission | ≤ 15 days | 15 days was fastest back-to-back shuttle launch time, occurred in 1995[140] |
| Launch Mission | < 24 hours | One-per-day launch window to SSP orbit, assuming passable launch conditions exist |
| Crew Rescue | 1 ~ 10 hours | Fairly arbitrary; dependant on docking location, crew/station conditions, etc… |
| Total Rescue Mission | ≤ 17 days | |

The limiting factor for the rescue mission is the time it takes to prepare a launch. Though the fastest shuttle turnaround time was 15 days, the CEV may be launched on existing commercial launch vehicles, and as a result, may have a faster "readiness" time. Also, there will be 28 days worth of contingency supplies aboard SSP in case of an emergency. Therefore, even for a 17-day rescue mission, the crew will be supported. Thus, a rescue mission to SSP will be possible.

### *10.4.2 Additional Docking Point*

If a rescue mission were required, the docking points along the central axis may not available (a potential situation if something was wrong with the docked CEV). Therefore, an alternative docking point is required. For this situation, an additional PMA will be installed on the bottom of Townhouse A, opposite the window on the Cupola module. Both the Shuttle and the Russian vehicles are both capable of docking to the PMAs attached to the ISS; therefore it can be assumed that the CEV will be designed to dock to them for SSP as well. If the rescue mission took place during the variable gravity or Mars simulation missions, the use of this PMA as docking port would require de-spinning the station. However, due to the time required to send up a rescue mission, this would not be problem; the longest time required for station spin-down is less than 27 hours.

This PMA can also be used as an EVA bailout location if necessary, and thus satisfies Level 1 Requirement #23.

## 10.5 CEV Rescue Vehicle (Schroeder)

The CEV will be used for crew rotation, emergency escape, rescue missions, and a small amount of supply. The CEV will be required to be docked for up to one year at a time during the Mars mission. It will be rotated once before every variable gravity test as well. The propulsion system will either include storable propellants, such as $N_2O_4$/UMDH, or a LOX/$LH_2$ cryogenic system used for re-entry to earth. The advantage of the storable system is that it can be stored for several years in sealed tanks without any appreciable propellant loss.[141] Storable systems are

[140] Dumuolin, Jim. "Space Shuttle Launch Archive." 1 Feb. 2003. Kennedy Space Center Science and Technology Home Page. 14 April 2006. <http://science.ksc.nasa.gov/shuttle/missions/missions.html>
[141] Sutton, George P.. Rocket Propulsion Elements. 7th. New York: John Wiley & Sons, Inc., 2001.

highly toxic though and NASA is aiming to use less in the way of storable propellants. $LOX/LH_2$ burns cleaner, but it boils off over time. If NASA chooses to use a $LOX/LH_2$ propulsion system, either extra tanks of propellants need to be sent to the station or efficient cryocoolers need to be used to prevent significant propellant boil-off.

## 10.6 Micrometeoroids (Moser)

Space Station Phoenix is inheriting the micrometeoroid shielding from the International Space Station. The ISS modules are shielded to protect against objects 1 cm in diameter or smaller[142]. The ISS also has extra shielding on the sides where most of the potential hazards originate from. It has movable shields for the windows (including the Cupola module). The shielding is effectively ablative, so as time passes the shielding becomes less and less effective. Molecular oxygen in the space around the station also contributes to the breakdown of the shielding, especially the mylar layers. Any damage that penetrates some of the layers of shielding gives the molecular oxygen more surface area to damage. These shields were designed with a twenty year lifespan in mind. By the time construction on Space Station Phoenix begins, the older modules will already have been in space at least 16 years.

Zvezda, the transfer tubes, and the tanks have separate issues from the rest of the pressurized sections. The only ISS module that is not fully shielded to resist 1 cm objects is Zvezda. It only has 6 of its planned 23 micrometeoroid extra shielding panels installed. Until these are sent up Zvezda is vulnerable to smaller objects, making it more likely that something will seriously damage it. The material used for the inflatable transfer tubes has built-in shielding against projectile hazards. However, because they do not have pressure doors for long distances, they are potentially hazardous. Fortunately the crew will theoretically not be spending much time in either Zvezda or the transfer tubes so it is statistically unlikely that anyone would be occupying these places when the station is hit by large debris. This also means that an impact might go unnoticed in these areas for longer than it would elsewhere. The transfer tubes in particular do not have many sensors in them and are usually only passed through while riding the lift. A hit on an external tank would be extremely bad and probably mean abandoning the station until repairs could be made and the tank refilled. The external tanks for SSP make up only 3% of its pressurized surface area. The tanks are unlikely to be the part pressurized section that takes a large impact.

The non-pressurized sections of the station are less of a problem. The solar panels and trusses are actually the smallest concern even though they have largest surface area. Because of their modular nature, a hit that destroys function in one section of a solar panel should not significantly harm the others. Also, SSP has a positive power margin so the loss of a few cells will not cause significant difficulty. As long as the connection to the station remains intact the solar panels should continue to function normally. The support trusses are used to carry loads, not people, so an impact there is unlikely to harm personnel. The trusses will have the same chance of being hit while they are a part of SSP as they do while connected to ISS. Also, a small

[142] Committee on ISS Meteoroid / Debris Risk Management, Protecting the ISS from Meteoriods and Orbital Debris. 1. Washington, D.C.: National Academy Press, 1997.

object that could pierce the thin walls of the pressurized modules would not necessarily be much threat to a truss.

The International Space Station maneuvers approximately once a year to avoid a possible collision. A collision is considered possible if a tracked piece of debris will pass within 37 meters of the station. Space Station Phoenix will be in the same orbit as the ISS and will sweep out an area that is larger than the actual station. It will be the area that is swept out, along with a margin such as that of ISS, that will determine how often SSP must maneuver to avoid debris. If SSP uses a similar margin it should have to maneuver more often than the ISS but not significantly so.

Overall the International Space Station has a 10% chance of being hit by something it cannot handle in its twenty year lifespan, according to NASA estimates. This includes their reduced chance of being hit due to avoidance maneuvers. It also includes that they have extra shielding in the areas of the station that are more likely to be hit. SSP on the other hand does not have that luxury. The modules are being rearranged and then spun so the extra shielding will not be in the most dangerous areas. SSP has extra modules such as the MLMs and the long, pressurized transfer tubes. Overall SSP has a 5% chance of being hit by something larger than 1 cm every year in a pressurized section.

# XI. Overall Station

## 11.1 Moment of Inertia

### *11.1.1 (Schoonover)*

The moment of inertia is essential for the attitude control, gravity spin-up, and docking stability because the accelerations in which to rotation the station are dependent up on the magnitudes of the moment of inertia axes and thus a driving force for the station design. Corresponding to the moment of inertia is the center of gravity of the station and the angle deflection of the configuration.

There are two components to calculate the moment of inertia; the individual components of the station and parallel axis theorem component. There are three types of shapes that were uses for calculating the individual mass moments of inertia; cylinders, hollowed cylinders, and box. Cylinder shapes were used to model tanks and storage modules because they are assumed to be filled with mass. Hollowed cylinders were used to model the modules. For modeling ease, it was assumed that the inner diameter of the modules is half of the outer diameter. This was assumed because of the racks and other masses housed within the modules. Lastly, boxes were used to model solar arrays and radiators. The second component of the moment of inertia calculation is the relationship the center of mass of the specific component has with the overall moment of inertia of the station. To account for this second component, the center of the geometric coordinate system is assumed located at the center of Node 1. In addition to having the modeled mass, there was additional point masses added to the station at specific locations because of the lack of information on the dimensions of the component.

Because the station is spinning, it is essential that the rotation be around the largest moment of inertia principal axis. If the station should spin about the smallest, the station would remain stable but not over an extended time because of perturbation forces. Should the station spin about the middle axis, the station will spin out of control. This is essential for our design because the station's large and middle principal axes are relatively close in magnitude. To calculate the principal axes values, the moment of inertia tensor is created and then treating the matrix as an Eigen value problem. Treating it this type of problem allows the principal axes to be calculated as well as the rotation matrix between the geometric axes and the principal axes. With this rotation matrix, the angle deflection can be calculated for the station. The ideal situation is to have that angle deflection to equal zero, but for our design, the requirement was less than 1 degree. In addition to understanding the angle deflection, it is important to find the center of gravity. The center of gravity of the station is the center of the principal axis and it is imperative that the principal axes equal the geometric axes for docking purposes. To get the center of gravity to match up, we moved the batteries, the robotic arms and the crew tank packages around the station until we found the center of gravity to equal zero. Moving these components affected the moment of inertia but once a balance was found in angle deflection, center of gravity and rotation axis moment of inertia, a final station configuration was found.

### *11.1.2 (Gardner)*

Several fairly simple design modifications, detailed in Appendix A.10, would bring the station into balance. Taking these into account, about the geometric axes, the moment of inertia tensor, in kg-m$^2$, is:

| | | |
|---|---|---|
| $2.89 \times 10^7$ | $3.56 \times 10^6$ | $-3.01 \times 10^6$ |
| $3.56 \times 10^6$ | $5.87 \times 10^8$ | $-2.87 \times 10^3$ |
| $-3.01 \times 10^6$ | $-2.87 \times 10^3$ | $6.05 \times 10^8$ |

About the principal axes, the moment of inertia tensor is:

| | | |
|---|---|---|
| $2.89 \times 10^7$ | 0 | 0 |
| 0 | $5.87 \times 10^8$ | 0 |
| 0 | 0 | $6.05 \times 10^8$ |

The angular difference between the principal and geometric z-axis is critical for rotation; the station will tend to spin about the principal axis with the highest moment of inertia, and we want this to be as close as possible to the geometric z-axis. The angular difference will be 0.307°, which should be within the acceptable range.

## 11.2 Center of Mass (Gardner)

### *11.2.1 Location*

On the z-axis, the center of gravity will be 1.03 meters below the center of node one (or 2.44 meters, if you ignore the non-rotating section.) The station is balanced about the center of node one on the x-y plane, within 0.08 m on the y-axis, and 0.01 m on the x.

A hypothetical test mass of 1000 kg can be added to the mass budget to determine the displacement of the center of mass. When it is added at the extreme end of a townhouse, the center of mass shifts by only 0.1 m on the x-axis. When it is added at the end of the US airlock on the y-axis, the shift is only 0.05 m. These mass shifts are quite small; therefore the station's center of mass is not sensitive to minor shifts of weight about the station.

The station's center of mass must be located at the center of the x-y plane, so that the station may rotate about the Z-axis. The initial baseline design included the current configuration of modules along the stability arms and townhouse B, and the identities of the modules in townhouse A. In order to balance the station, modules must be moved around on townhouse A, along the main truss, and attached to the stability arm.

### *11.2.2 Ballasting*

It will, nevertheless, occasionally be necessary to shift weight around to compensate for movement of people and objects about the station. Several consumables tanks are located in key areas of the station. Along the y-axis, there are hydrazine and water tanks. These fluids can be shifted from one side to the other, as it is necessary. Along the x-axis, on the main truss, there are $N_2O_4$/UDMH tanks. These propellants can likewise be shifted as necessary. For coarser

adjustments, the crew can occasionally transfer supply packages between townhouses B and A as necessary.

## 11.3 Cost for SSP (Moskal, Metzger):

### *11.3.1 Introduction:*

Now that Space Station Phoenix has been designed and the missions planned, the question is, how much money is required to make this wonderful station a reality? The objective is to spend as little money as possible while fulfilling all the requirements and making this the best Space Station possible. The Level 1 requirements stated that the budget consisted of $20 billion in 2006 dollars. From this, the team knew it was extremely necessary to re-use as many ISS parts as possible. In addition, after the station is fully constructed, the year to year budget must be no more than $1 billion in 2006 dollars. From this there is a lot to consider in terms of sending as much material up as possible, as early as possible. After looking at the requirements, it was decided to attempt to go above and beyond what was asked of us, and set personal cost goals for SSP. Our group goal was to meet a 30% cost margin, making our goal budget of $14 billion and having $6 billion as our margin, all in 2006 dollars. This would be hard to accomplish, and there would be many types of problems along the way to calculate the cost budget as accurately as possible.

### *11.3.2 What was Done First:*

For the first iteration of SSP, cost of the station was not done properly and did not include all aspects, in addition to being well over budget with them in estimated calculations. Originally, money budgeted $8 billion for launch costs, $3 billion for assembly, and $3 billion for ground control. At the time it was unclear how to calculate production costs and they were not included. Either way, the launch cost alone was approximately $28.5 billion, and it was assumed assembly and ground control costs were both what was budgeted for. As the team would come to learn, it was necessary to be more accurate, and calculate the budget with every aspect possible.

### *11.3.3 What was Improved & Second Iteration (Phantom Torso):*

After the preliminary design review for SSP, there were many problems that needed to be solved quickly, and the team had to figure out ways to meet the Level 1 requirements while at the same time meeting the budget. From this, the team came up with cost allocations consisting of research and development, manufacturing, launch (including the de-orbiting of unused ISS parts still in space), and ground control costs. Using later stated algorithms, the budget instantly had a more accurate tone and it was easier to keep track of the station's cost as ideas and designs were made. Also, the current station was too massive and it was necessary to get the mass down to reduce launch costs, as well as keep production costs down as much as possible. Simply put, a brand new design for Space Station Phoenix.

Another big problem was meeting the radiation requirement because of the amount of money it required. Therefore, the Level 1 requirement was relieved with the concept of making a proposal to NASA to have a phantom torso study that will be completed before the construction of SSP, costing $2.55 billion in 2006 dollars. As a result, the team could keep the station at low earth orbit, and start cost calculations from here.

### *11.3.4 Cost Heuristics:*

Cost estimation of space systems and sub-systems are related to the cost of similar past systems as a function of the mass of the system or sub-system. Cost estimation follows a power curve that matches the equation:

$$C(\$2006M) = a[m_i\{kg\}]^b \qquad \text{(Eq.11.3.1)}^{143}$$

The values for a and b are supplied in Table 11.3.1.

Table 11.3.1: The 'a' and 'b' values for estimating the cost of non-recurring and first production off the assembly line for different systems and subsystems.[143]

| Spacecraft Type | Nonrecurring a | Nonrecurring b | 1st Unit Production a | 1st Unit Production b |
|---|---|---|---|---|
| Manned Spacecraft | 21.3 | 0.55 | 0.670 | 0.662 |
| Unmanned Earth Orbital | 4.06 | 0.55 | 0.461 | 0.662 |
| Scientific Instruments | 2.17 | 0.5 | 0.307 | 0.7 |
| Simple Structure | 0.614 | 0.454 | 0.101 | 0.536 |
| Complex Structure | 0.730 | 0.623 | 0.0956 | 0.789 |
| Attitude Control | 0.992 | 0.768 | 0.220 | 0.888 |
| Other Support | 0.0319 | 0.789 | 0.0319 | 0.789 |
| Full Tanks | 0.0106 | 1 | 0.0133 | 1 |
| Solar Array | 0.0350 | 0.946 | 0.0640 | 0.946 |
| Batteries | 0.0106 | 1.145 | 0.00930 | 1.145 |
| Active Thermal | 0.0359 | 0.96 | 0.0120 | 0.96 |
| Fixed Antennas | 0.259 | 0.793 | 0.17264 | 0.793 |
| Drive Mechanism | 0.0239 | 1.16 | 0.0239 | 1.16 |
| Power Source and Distribution | 0.130 | 0.893 | 0.0651 | 0.894 |

The learning curve of production manufacturing is 85% and follows the power equation:

$$C_i = C_1 * (i)^P \qquad \text{(Eq.11.3.2)}^{1}$$

The unknown variables in Eq. 11.3.2 are $C_1$, $C_i$, and p. If the unit production number i = 2, than $C_1$ and $C_2$, the cost of unit number one and two respectively, are unknown individually but we know $C_2$ divided by $C_1$ equals our learning curve of 85%. Since the second unit is being calculated, p can be solved for by rearranging Eq.2 and taking the natural log of both sides to yield:

$$P = \frac{\ln(\frac{C_2}{C_1})}{\ln(2)} \qquad \text{(Eq.11.3.3)}^{1}$$

Solving for p in Eq. 11.3.3 with $C_2/C_1 = 0.85$ and Unit Production Number = 2, p = -0.2345. Now that p is known, the cost of any unit can be calculated using Eq. 11.3.2.

[143] Akin, David L. ENAE 483/788D – Lecture #7, Cost Estimation and Analysis. 20 Oct. 2006. University of Maryland. 3 May 2006. <http://spacecraft.ssl.umd.edu/academics/483F05/483L07.costing/483L07.costing.2005.pdf>

### *11.3.5 Research and Development*

For calculating the cost for any items that group members needed to be designed that have never been used before, an excel file was created with the correct formula for each respective type of item. Then, the mass was plugged into the formula stated in the *Cost Heuristics* section, depending on what type of mass it was. Research and development of masses is an expensive process, and then all items need to be made. From this, it is seen that the more re-used ISS parts or off the shelf parts that SSP was composed of, the less money needed for the cost budget. All costs listed in the tables below do not include the building or manufacturing of each item. The costs for research and development are just to design these new components, nothing more. The resulting cost per section is shown in Table 11.3.2:

Table 11.3.2: Shows all masses and their respective costs for new designs.

| **Mass of New Design, unmanned** | | | |
|---|---|---|---|
| | **Mass (kg)** | **$Millions** | **$Billions** |
| CRA (Non Spin Bearing/Motor) | 650 | 145.493 | 0.145 |
| **TOTALS** | **650** | **145.493** | **0.145** |

| **Mass of New Design, simple structure** | | | |
|---|---|---|---|
| | **Mass (kg)** | **$Millions** | **$Billions** |
| Module support structure A | 11000 | 41.940 | 0.042 |
| Module support structure B | 12000 | 43.630 | 0.044 |
| Pirs adapter | 1200 | 15.339 | 0.015 |
| **TOTALS** | **24200** | **100.909** | **0.101** |

| **Mass of New Design, complex structure** | | | |
|---|---|---|---|
| | **Mass (kg)** | **$Millions** | **$Billions** |
| CEV Docking Adapter | 1200 | 60.519 | 0.061 |
| **TOTALS** | **1200** | **60.519** | **0.061** |

| **Mass of New Design, manned** | | | |
|---|---|---|---|
| | **Mass (kg)** | **$Millions** | **$Billions** |
| CRA (non spin bearing/motor airlock) | 1000 | 921.955 | 0.922 |
| **TOTALS** | **1000** | **921.955** | **0.922** |

| **Mass of New Design, Attitude Control** | | | |
|---|---|---|---|
| | **Mass (kg)** | **$Millions** | **$Billions** |
| Thruster supports | 255 | 69.943 | 0.070 |
| **TOTALS** | **255** | **69.943** | **0.070** |

| **Mass of New Design, scientific instrument** | | | |
|---|---|---|---|
| | **Mass (kg)** | **$Millions** | **$Billions** |
| Mars Simulation equipment | 800 | 61.356 | 0.061 |
| Tool Work Station | 300 | 37.573 | 0.038 |
| Sandbox Facility | 1200 | 75.146 | 0.075 |
| Rover Simulation | 100 | 21.693 | 0.022 |
| **TOTALS** | **2400** | **195.767** | **0.196** |

### *11.3.6 Manufacturing:*

Next, all the materials that were in the research and development section needed to be produced or manufactured. This included other items that were necessary but not off-the-shelf or already built. If more than one of the listed materials needed to be made or manufactured, the 85% learning curve made them cheaper as more were made. This is seen throughout Tables 11.3.3 to 11.3.16. Also, the formulas for each item in the *Cost Heuristics* varied depending on what kind of part was being made. In other words, when a material or mass was listed as being manufactured, the category or type was first determined, then put into the proper table and cost was calculated. If the item was too expensive, then the mass was scrapped and a new idea or material was required. The total cost for manufactured materials was $1.87 billion, almost 14% of the cost for SSP. Finally, all masses were put into their respective categories, with the results shown in Table 11.3.3 through Table 11.3.16:

Table 11.3.3: Production cost of unmanned objects.

| **Mass of manufactured, unmanned** | **Production #:** | **1** | **2** | **TOTAL** |
|---|---|---|---|---|
| | **Mass (kg)** | **$Millions** | | |
| Motor/Bearing (inertial cap) | 650 | 33.375 | 28.370 | 61.744 |
| | **$Billions Total** | **0.0334** | **0.0284** | **0.0617** |

Table 11.3.4: Production costs of manned objects.

| **Mass of manufactured, manned** | **Production #:** | **1.000** | **2.000** | **3** | **TOTAL** |
|---|---|---|---|---|---|
| | **Mass (kg)** | **$Millions** | | | |
| Node 3 | 15000.000 | | 325.276 | 295.785 | 621.061 |
| Transfer Tube | 896.000 | 59.582 | 50.647 | | 110.229 |
| CRA (nonspin bearing motor airlock) | 1000.000 | 64.061 | | | 64.061 |
| Pirs (replacement) | 3630.000 | 150.014 | | | 150.014 |
| | **$Billions Total** | **0.274** | **0.376** | **0.296** | **0.945** |

Table 11.3.5: Production costs of scientific instruments.

| **Mass of manufactured, scientific instruments** | **Production #:** | **1** | **TOTAL** |
|---|---|---|---|
| | **Mass (kg)** | **$Millions** | |
| Mars Simulation Equipment | 800 | 33.051 | 33.051 |
| Tool Work Station | 300 | 16.634 | 16.634 |
| Sandbox Facility | 1200 | 43.898 | 43.898 |
| Hygienic Facility | 100 | 7.709 | 7.709 |
| Waste Collection Facility | 111.5 | 8.320 | 8.320 |
| Rover Simulation | 100 | 7.709 | 7.709 |
| | **$Billions Total** | **0.117** | **0.117** |

Table 11.3.6: Production costs of complex structures.

| **Mass of manufactured, complex structure** | **Production #:** | **1** | **2** | **3** | **TOTAL** |
|---|---|---|---|---|---|
| | **Mass (kg)** | **$Millions** | | | |
| CEV Docking Adapter | 1200 | 25.704 | 21.850 | 19.869 | 67.422 |

| | | | | | |
|---|---|---|---|---|---|
| PMA | 1200 | 25.704 | 21.850 | | 47.554 |
| | **$Billions Total** | **0.051** | **0.044** | **0.020** | **0.115** |

Table 11.3.7: Production costs of simple structures.

| **Mass of manufactured, simple structure** | **Production #:** | **1** | **TOTAL** |
|---|---|---|---|
| | **Mass (kg)** | **$Millions** | |
| Module support structure A | 11000 | 14.798 | 14.798 |
| Module support structure B | 12000 | 15.504 | 15.504 |
| Pirs adapter | 1200 | 4.513 | 4.513 |
| | **$Billions Total** | **0.03482** | **0.03482** |

Table 11.3.8: Production costs of solar arrays.

| **Mass of manufactured, solar array** | **Production #:** | **1** | **2** | **TOTAL** |
|---|---|---|---|---|
| | **Mass (kg)** | **$Millions** | | |
| Solar Panels | 650 | 29.205 | 24.825 | 54.030 |
| | **$Billions Total** | **0.0292** | **0.0248** | **0.0540** |

Table 11.3.9: Production costs of full tanks.

| **Mass of manufactured, full tanks** | **Production #:** | **1** | **2** | **TOTAL** |
|---|---|---|---|---|
| | **Mass (kg)** | **$Millions** | | |
| Xenon Tank 1 | 49.2 | 0.653 | 0.555 | 1.209 |
| Xenon Tank 2 | 1743 | 23.147 | 19.676 | 42.823 |
| UDMH Tank | 371.5 | 4.934 | 4.194 | 9.127 |
| N2O4 Tank | 327.5 | 4.349 | 3.697 | 8.046 |
| Hydrazine Tank | 2312 | 30.703 | | 30.703 |
| Water tank | 3280 | 43.558 | | 43.558 |
| | **$Billions Total** | **0.107** | **0.028** | **0.135** |

Table 11.3.10: Production costs of batteries.

| **Mass of manufactured, batteries** | **Production #:** | **1** | **TOTAL** |
|---|---|---|---|
| | **Mass (kg)** | **$Millions** | |
| Batteries | 3330 | 100.345 | 100.345 |
| | **$Billions Total** | **0.100** | **0.100** |

Table 11.3.11: Production costs of fixed antennas.

| **Mass of manufactured, fixed antennas** | **Production #:** | **1** | **2** | **3** | **4** | **TOTAL** |
|---|---|---|---|---|---|---|
| | **Mass (kg)** | **$Millions** | | | | |
| Antennas | 25 | 2.217 | 1.884 | 1.713 | 1.602 | 7.416 |
| | **$Billions Total** | **0.00222** | **0.00188** | **0.00171** | **0.00160** | **0.00742** |

Table 11.3.12: Production costs of power sources and distribution items

| **Mass of manufactured, power source & distribution** | **Production #:** | **1** | **TOTAL** |
|---|---|---|---|
| | **Mass (kg)** | **$Millions** | |
| PMAD | 4400 | 117.663 | 117.663 |
| | $Billions Total | 0.1177 | 0.1177 |