# 0G Human Factors and Habitability

- Overview
- Required Crew Volumes
- Human Physiological Adaptation to 0G
- Workstation Design
- Restraint Design
- Ideal Cabin Layout
- Stowage

# Mercury Spacecraft Interior Layout

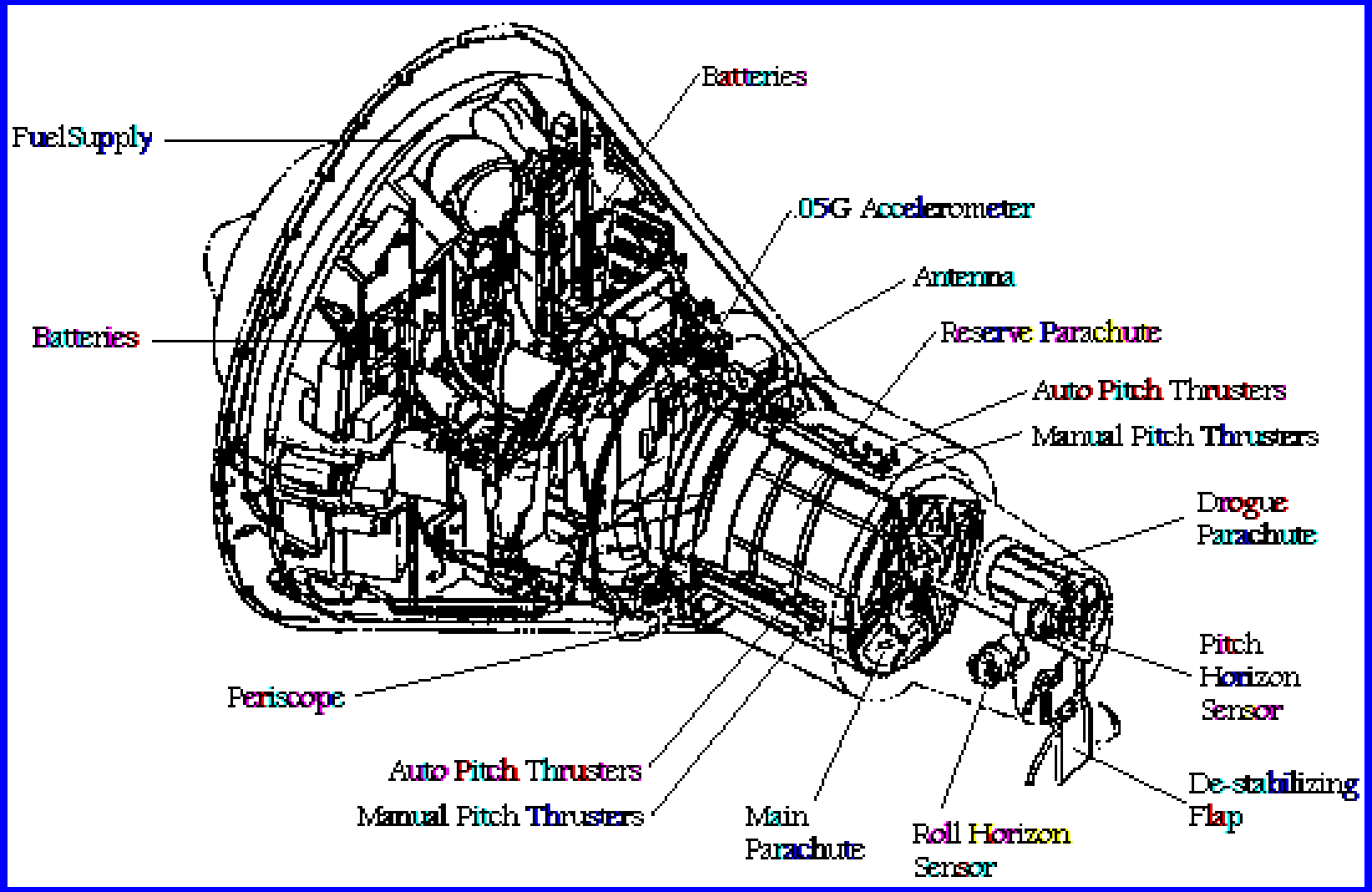

# Gemini 4 Crew Cabin

# Apollo Spacecraft (Rescue Configuration)

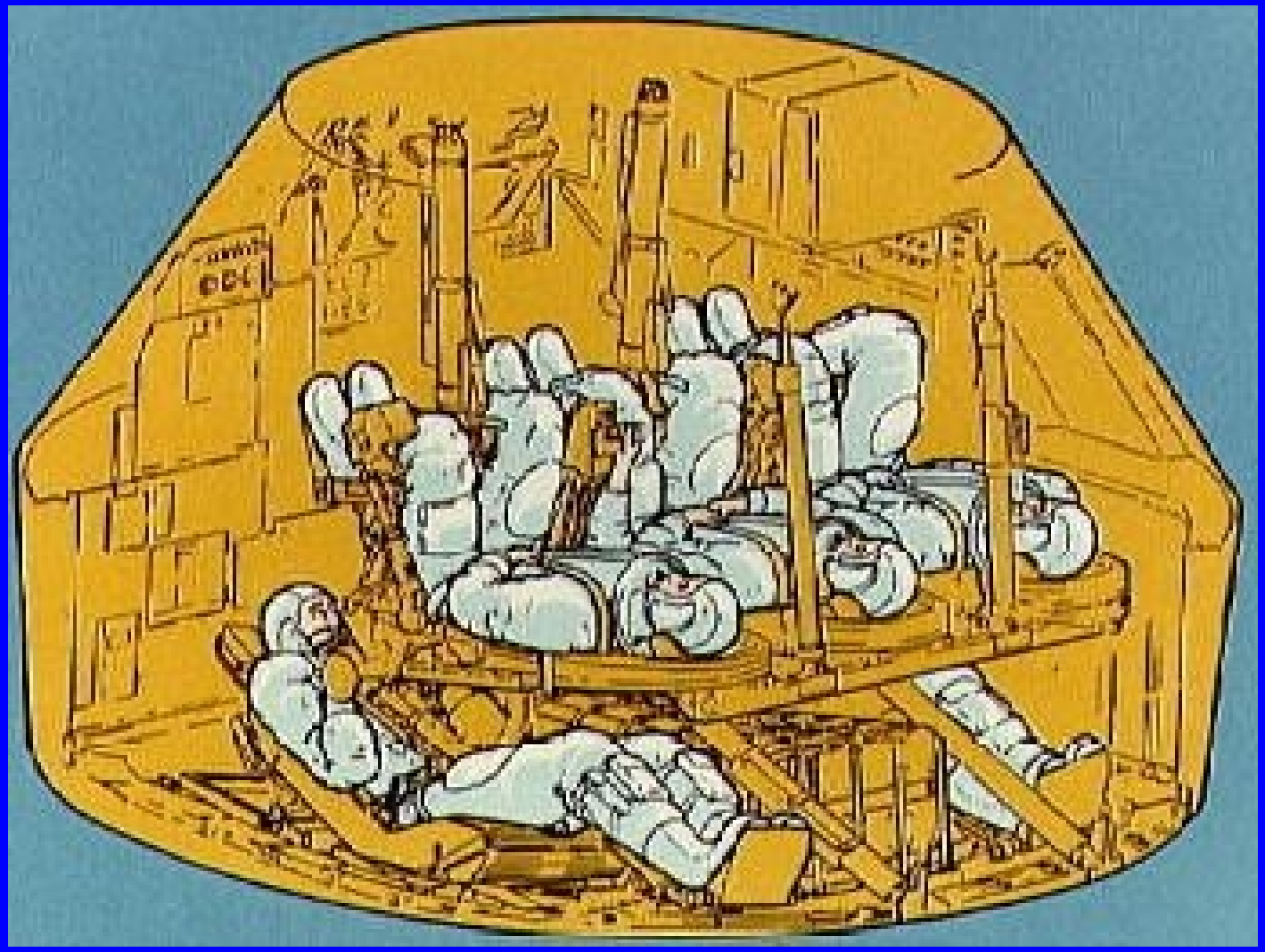

# Required Habitable Volume

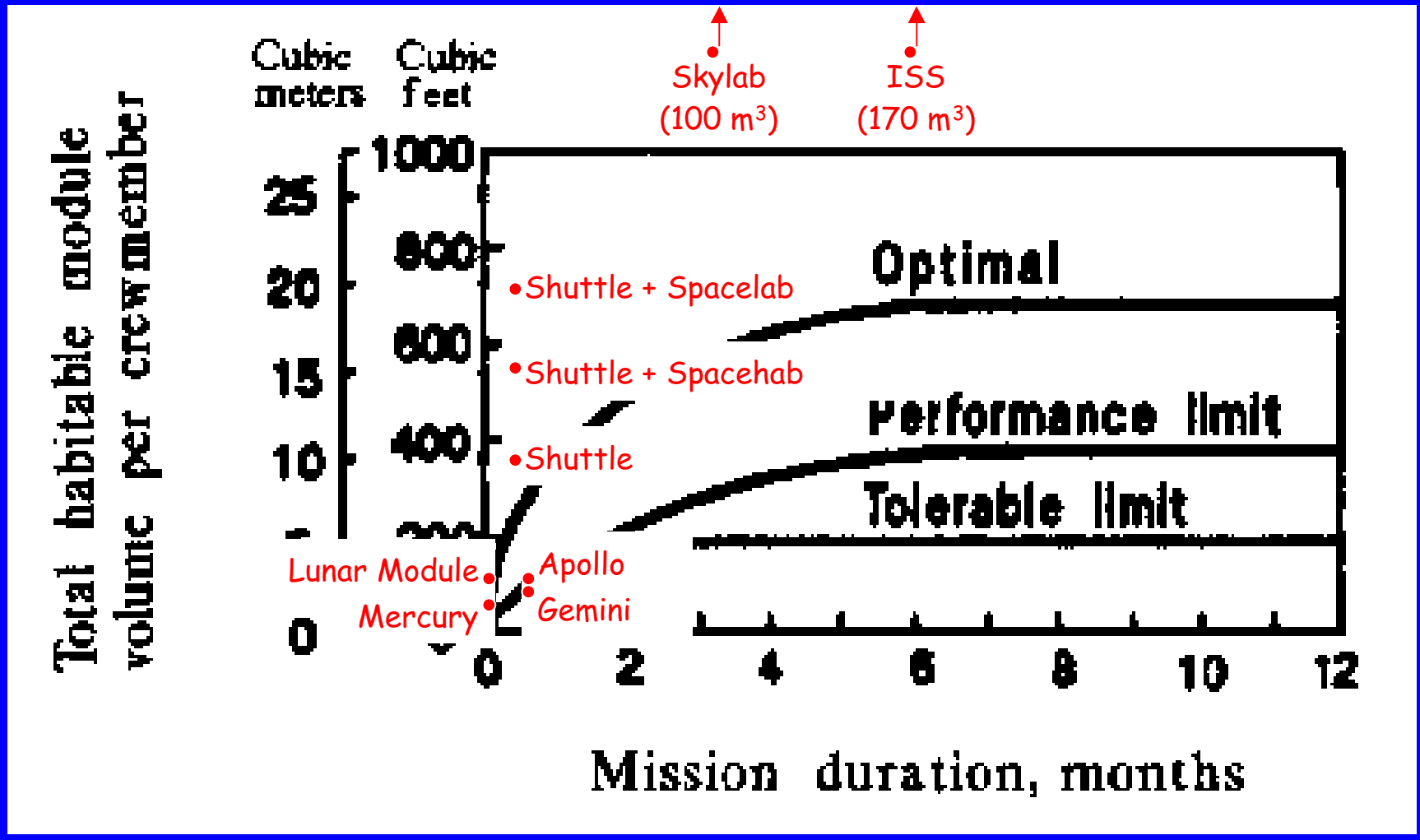


From Nicogossian et. al., *Space Biology and Medicine, Vol. II: Life Support and Habitability*, AIAA, 1994

# 0G Neutral Body Posture

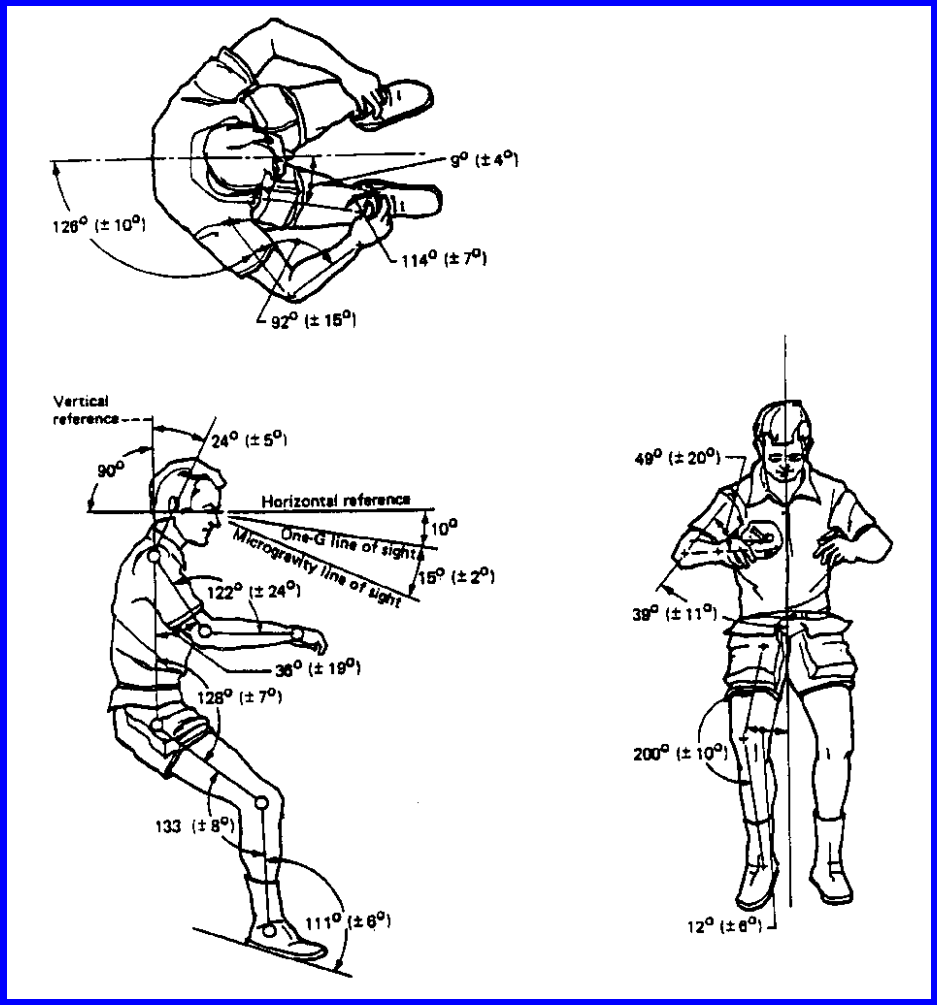


From Nicogossian et. al., *Space Biology and Medicine, Vol. II: Life Support and Habitability*, AIAA, 1994

# 0G Restrained Reach Envelope

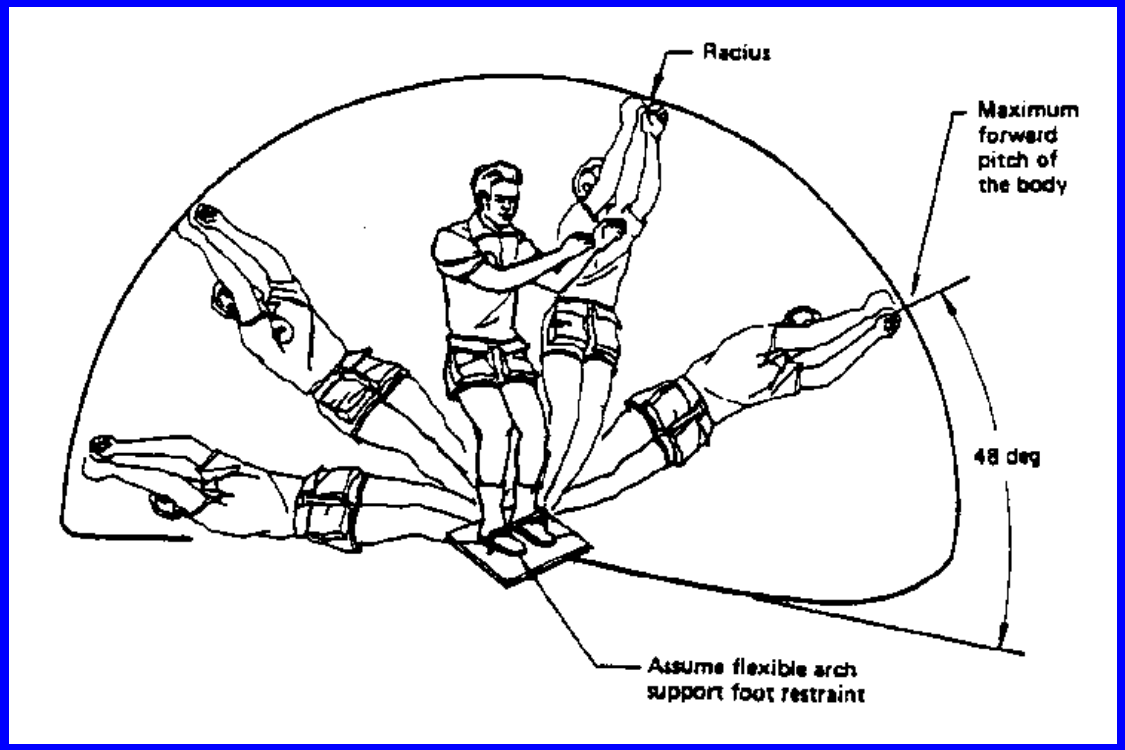


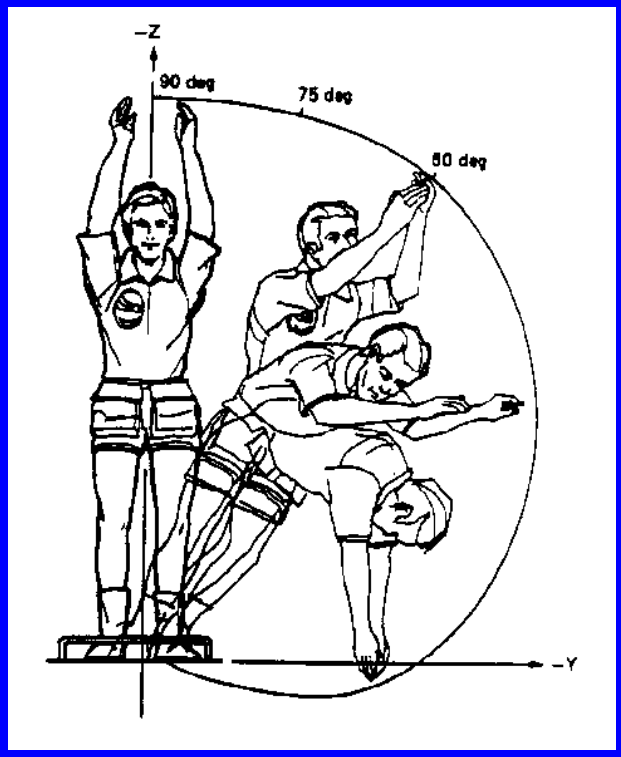


From Nicogossian et. al., *Space Biology and Medicine, Vol. II: Life Support and Habitability*, AIAA, 1994

# OG Workstation Layout

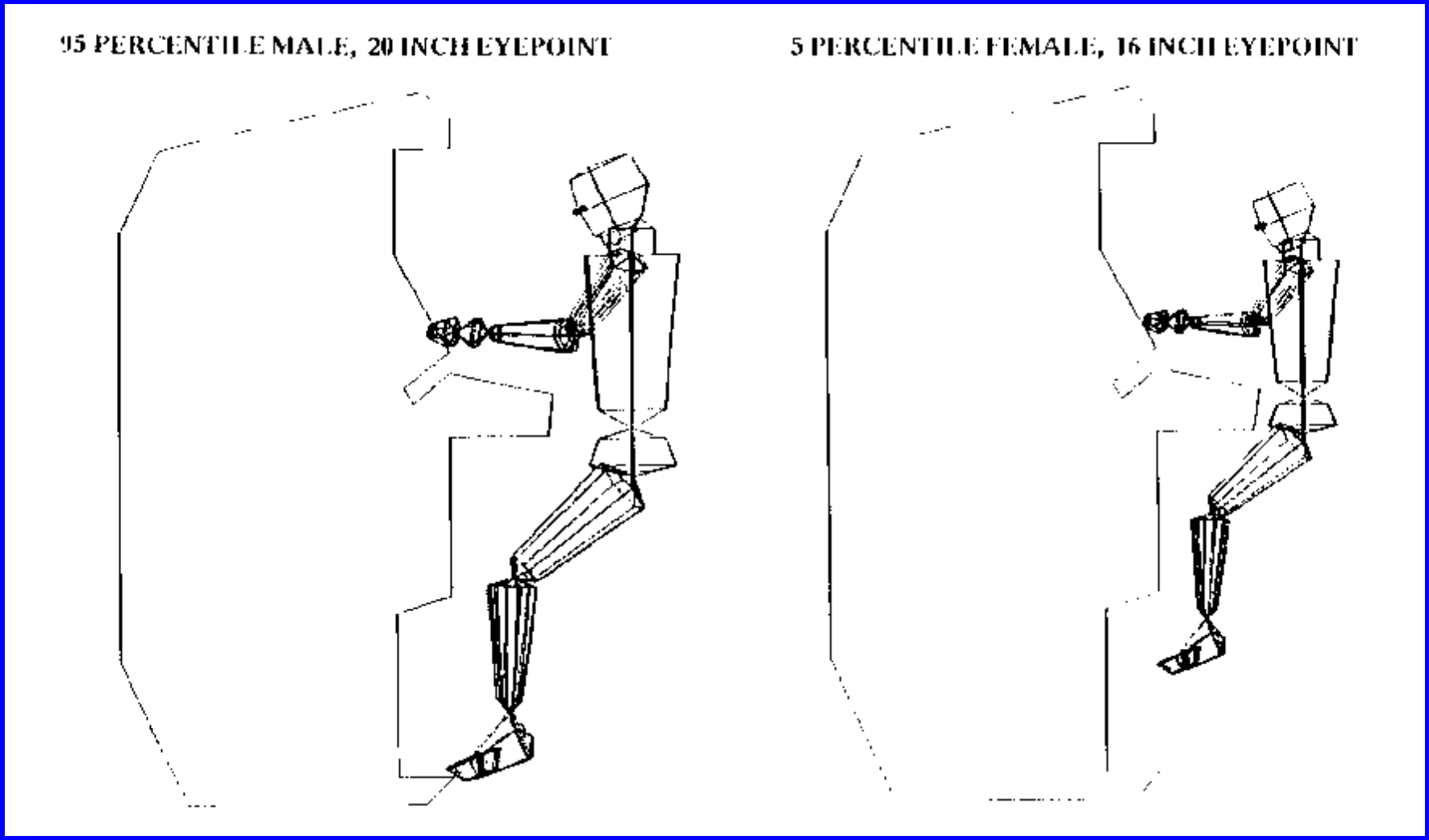


From Nicogossian et. al., *Space Biology and Medicine, Vol. II: Life Support and Habitability*, AIAA, 1994

# Skylab Chair Restraint

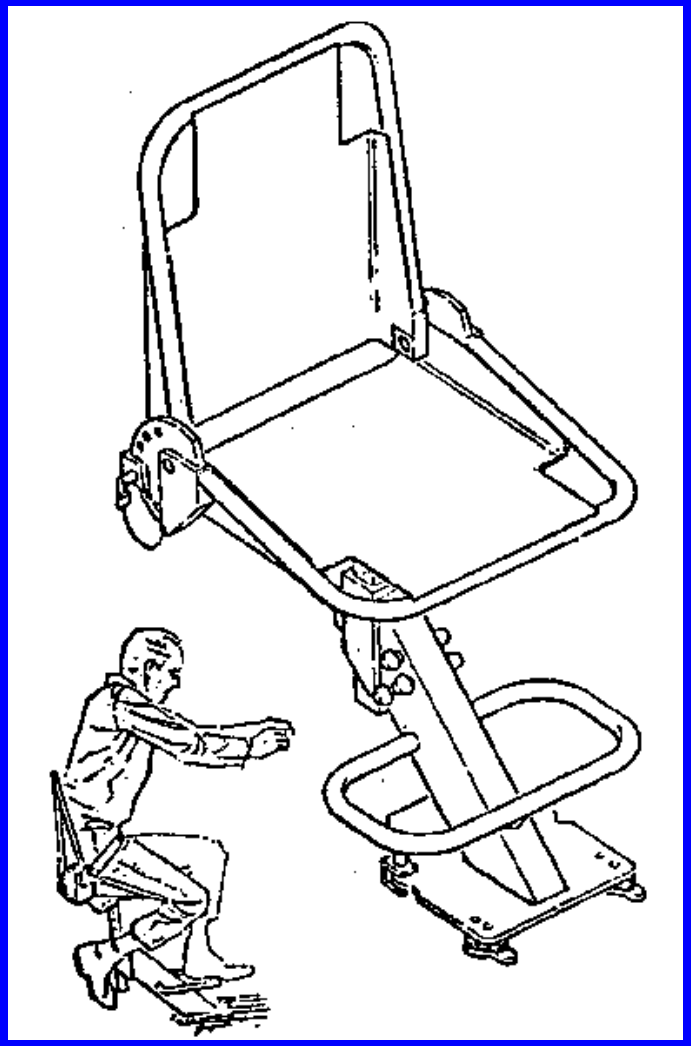

From *MSFC Skylab Crew Systems Mission Evaluation*, NASA TM X-64825, 1974

# Skylab Table Restraints

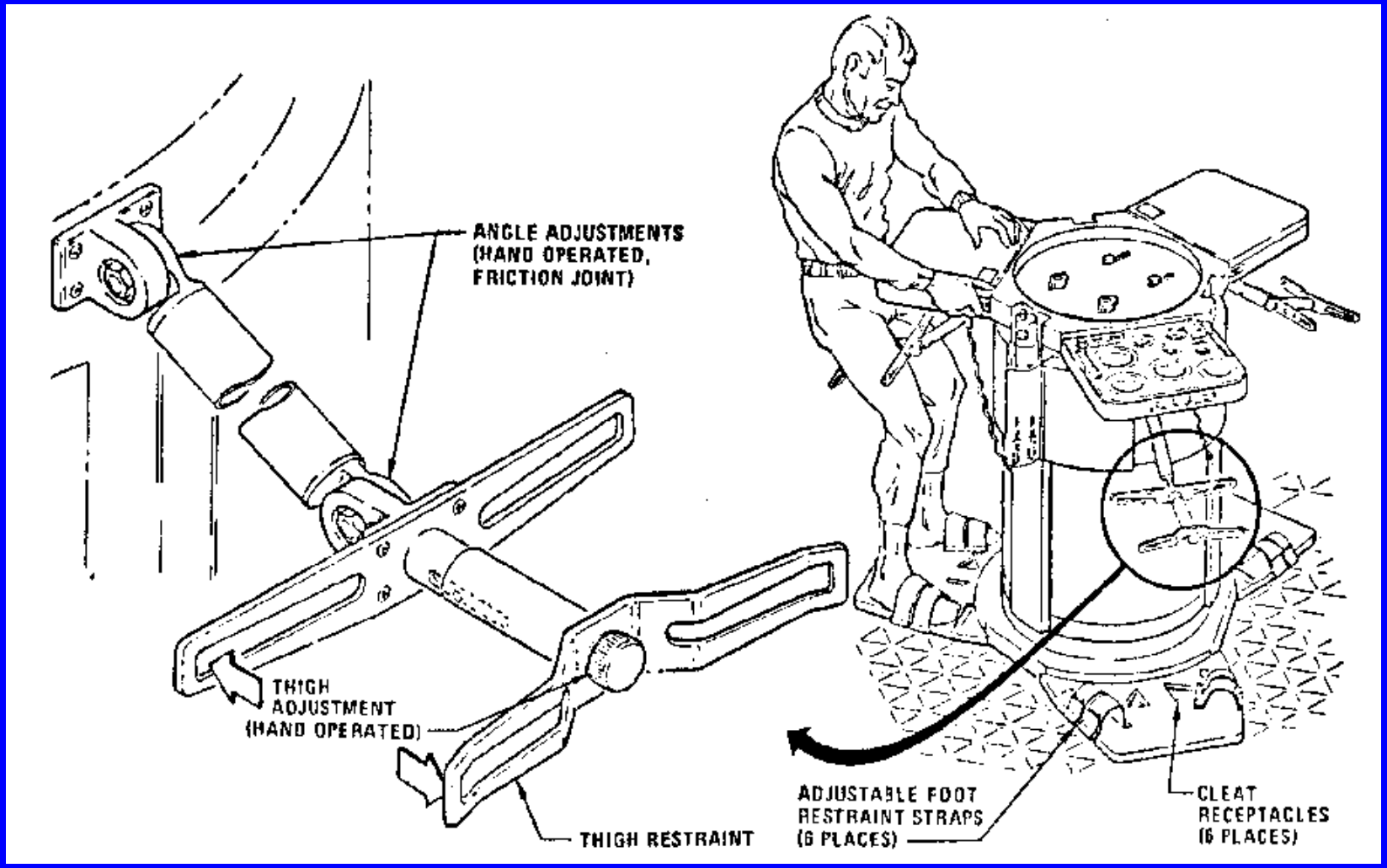


From *MSFC Skylab Crew Systems Mission Evaluation*, NASA TM X-64825, 1974

# Isogrid Flooring Design

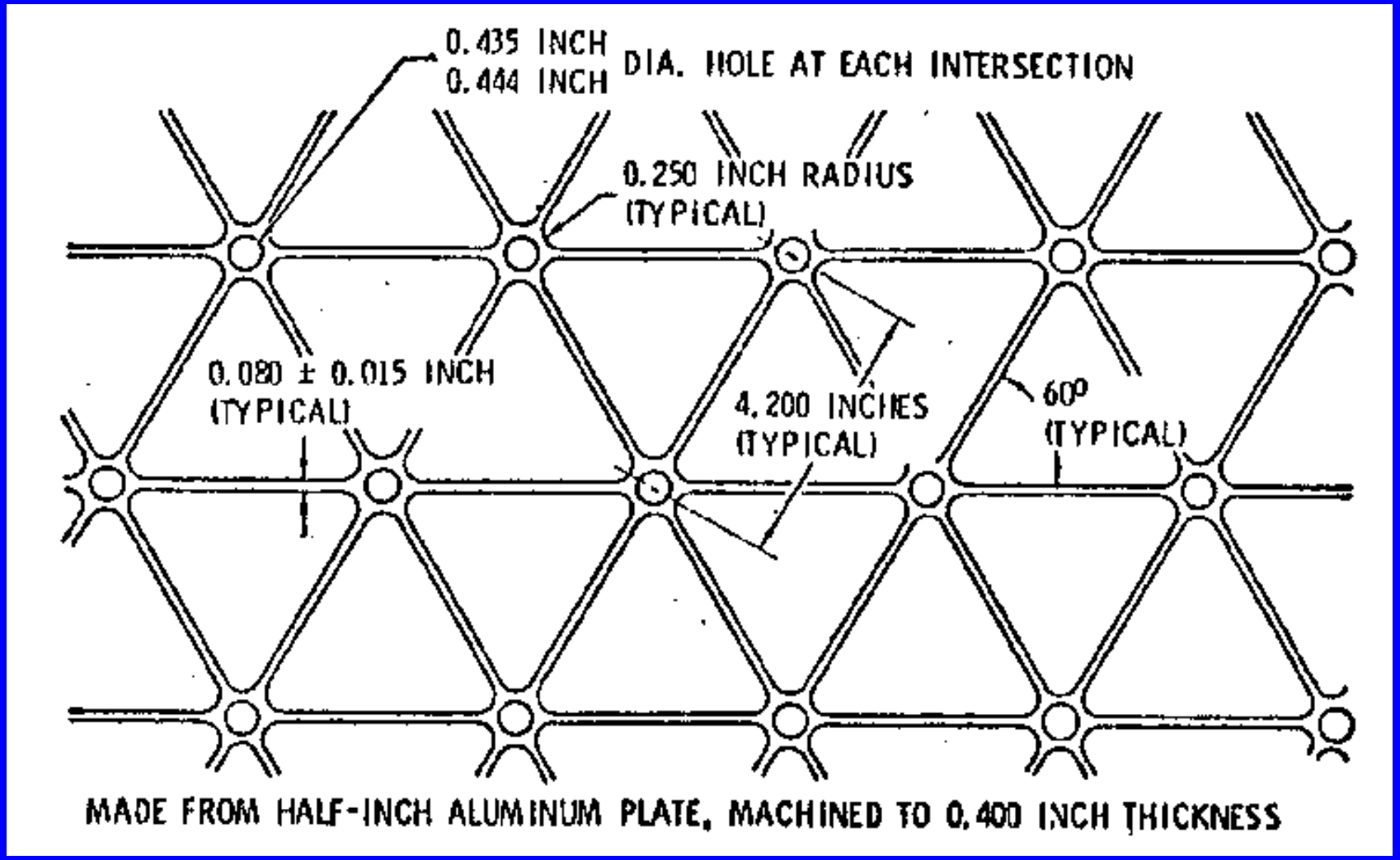


From *MSFC Skylab Crew Systems Mission Evaluation*, NASA TM X-64825, 1974

# Cleat Restraint System

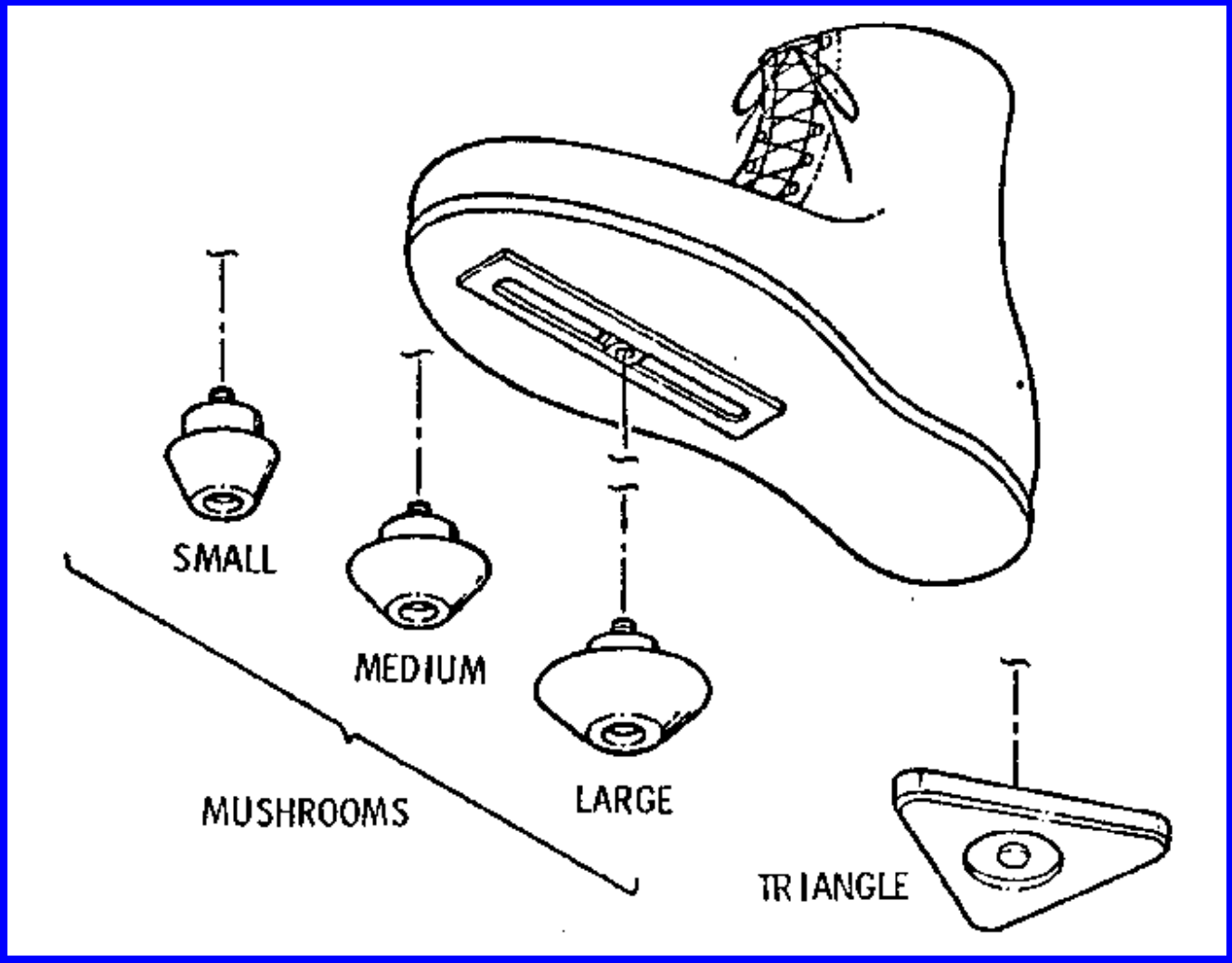


From *MSFC Skylab Crew Systems Mission Evaluation*, NASA TM X-64825, 1974

# EVA Foot Restraints

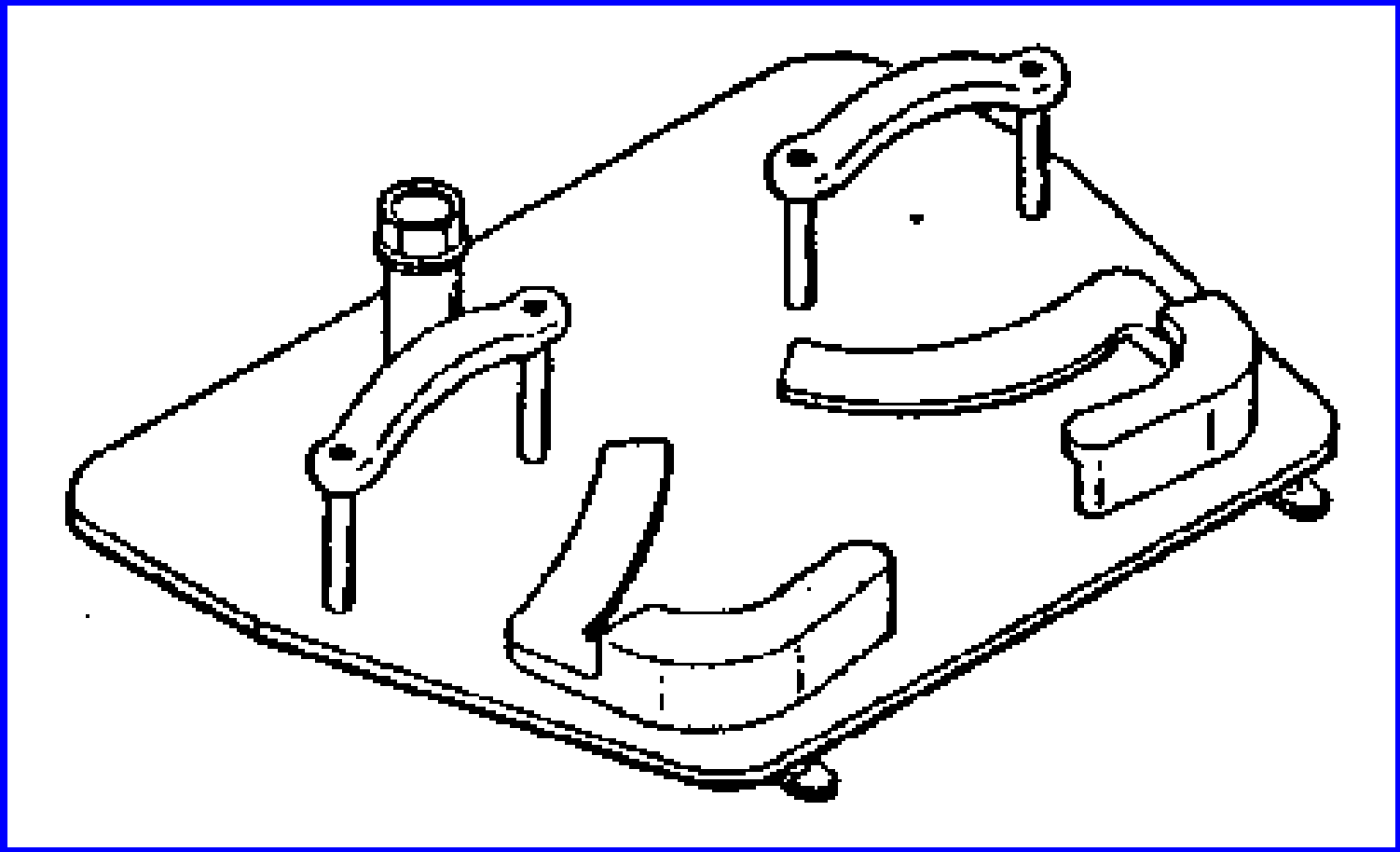

From *MSFC Skylab Crew Systems Mission Evaluation*, NASA TM X-64825, 1974

# Skylab Exterior Configuration

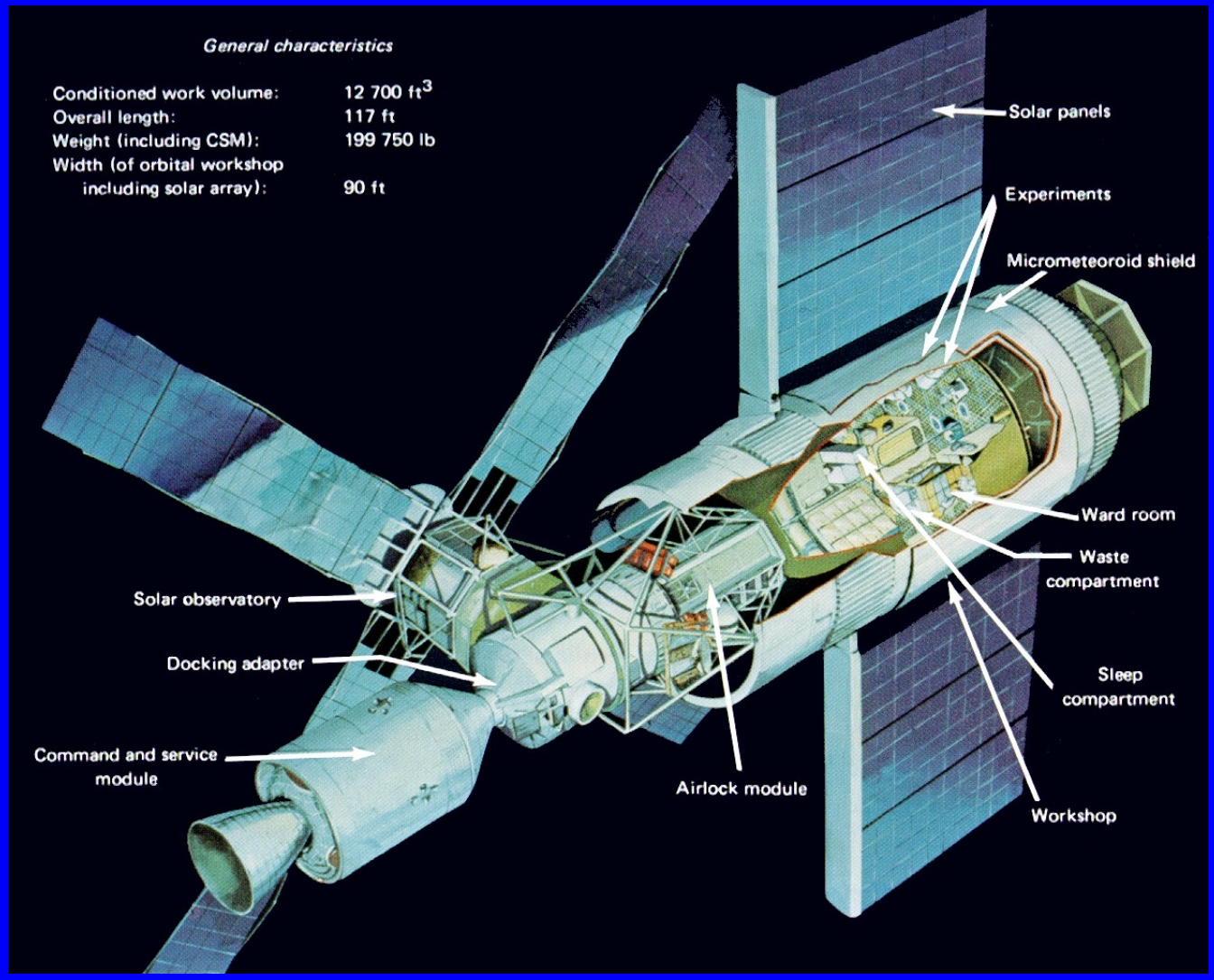

# Skylab Orbital Work Shop Interior

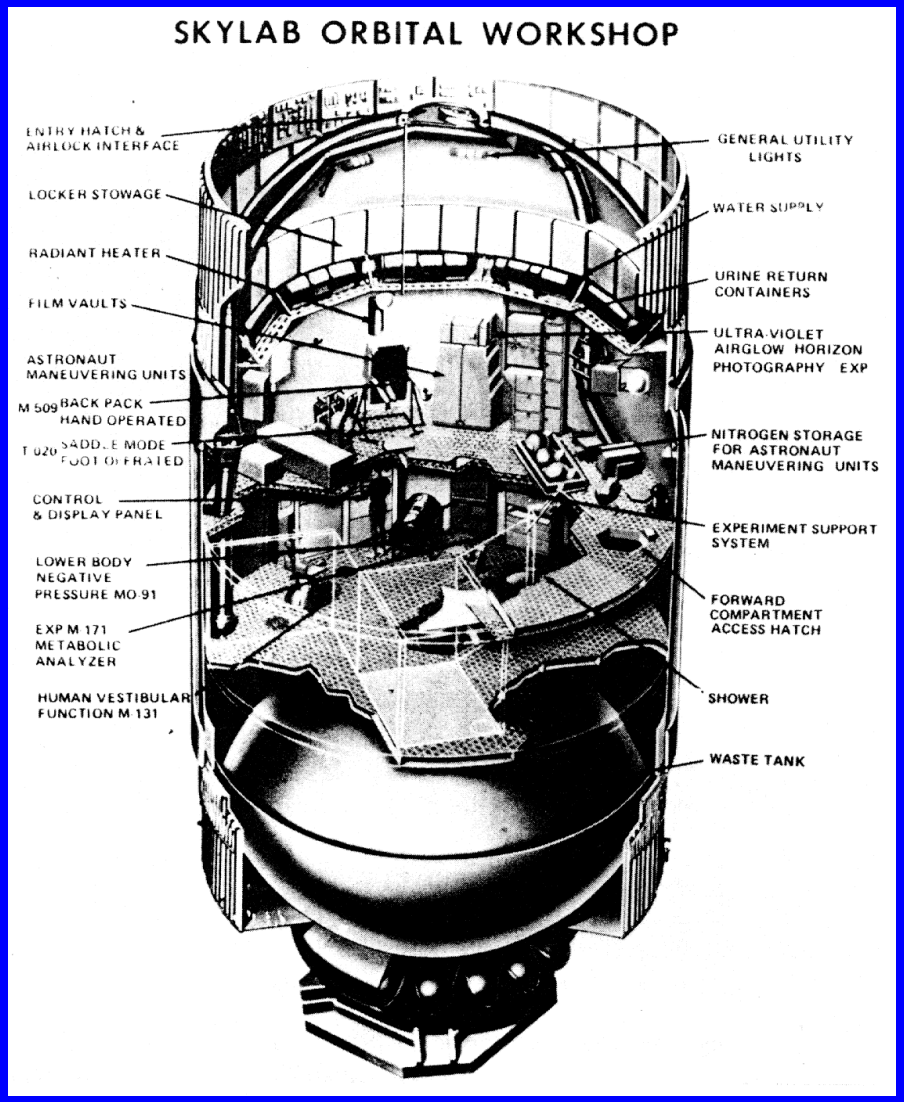

# Skylab Multiple Docking Adapter Layout

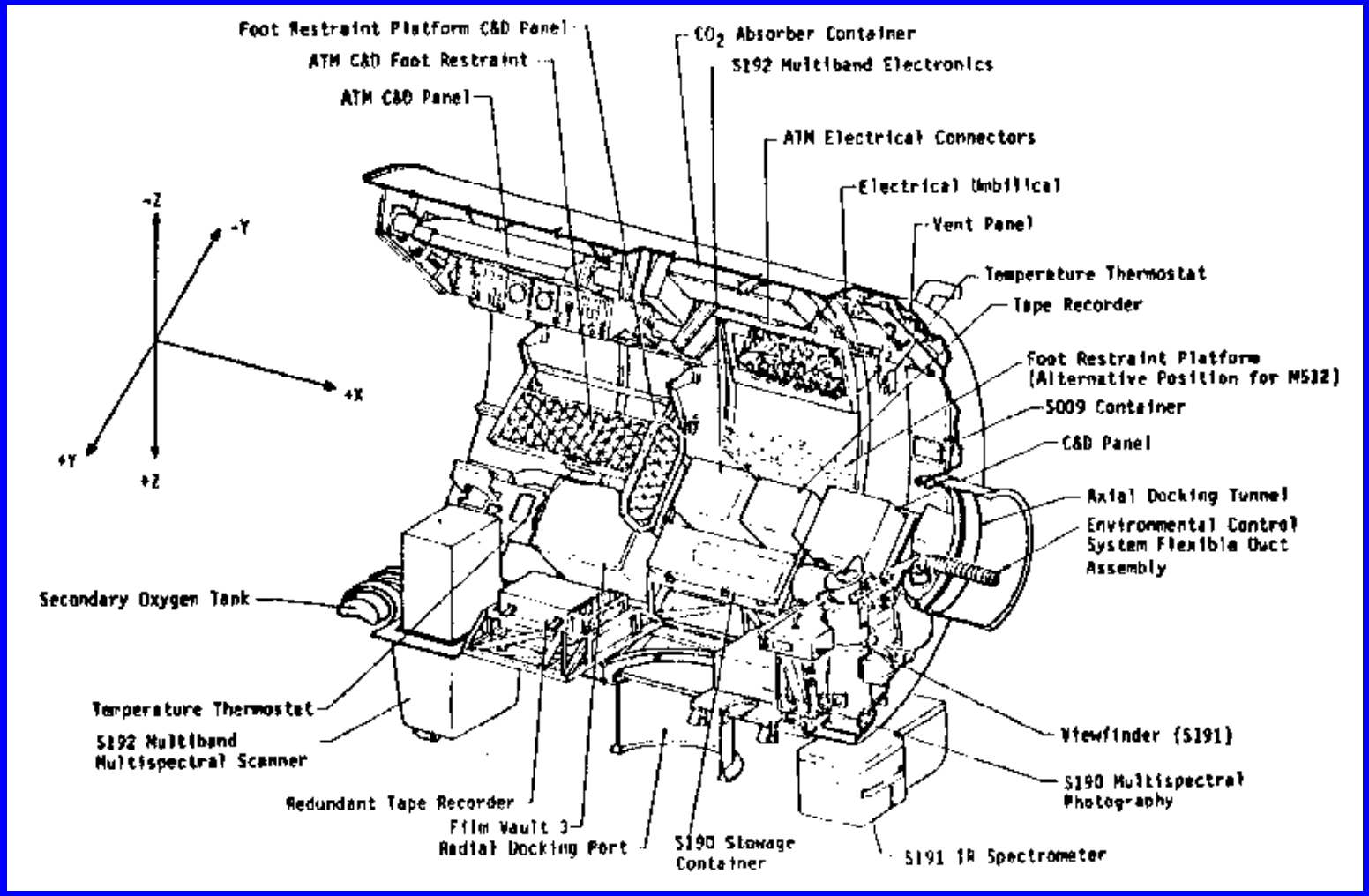


From *MSFC Skylab Crew Systems Mission Evaluation*, NASA TM X-64825, 1974

# Skylab Living Quarters Layout

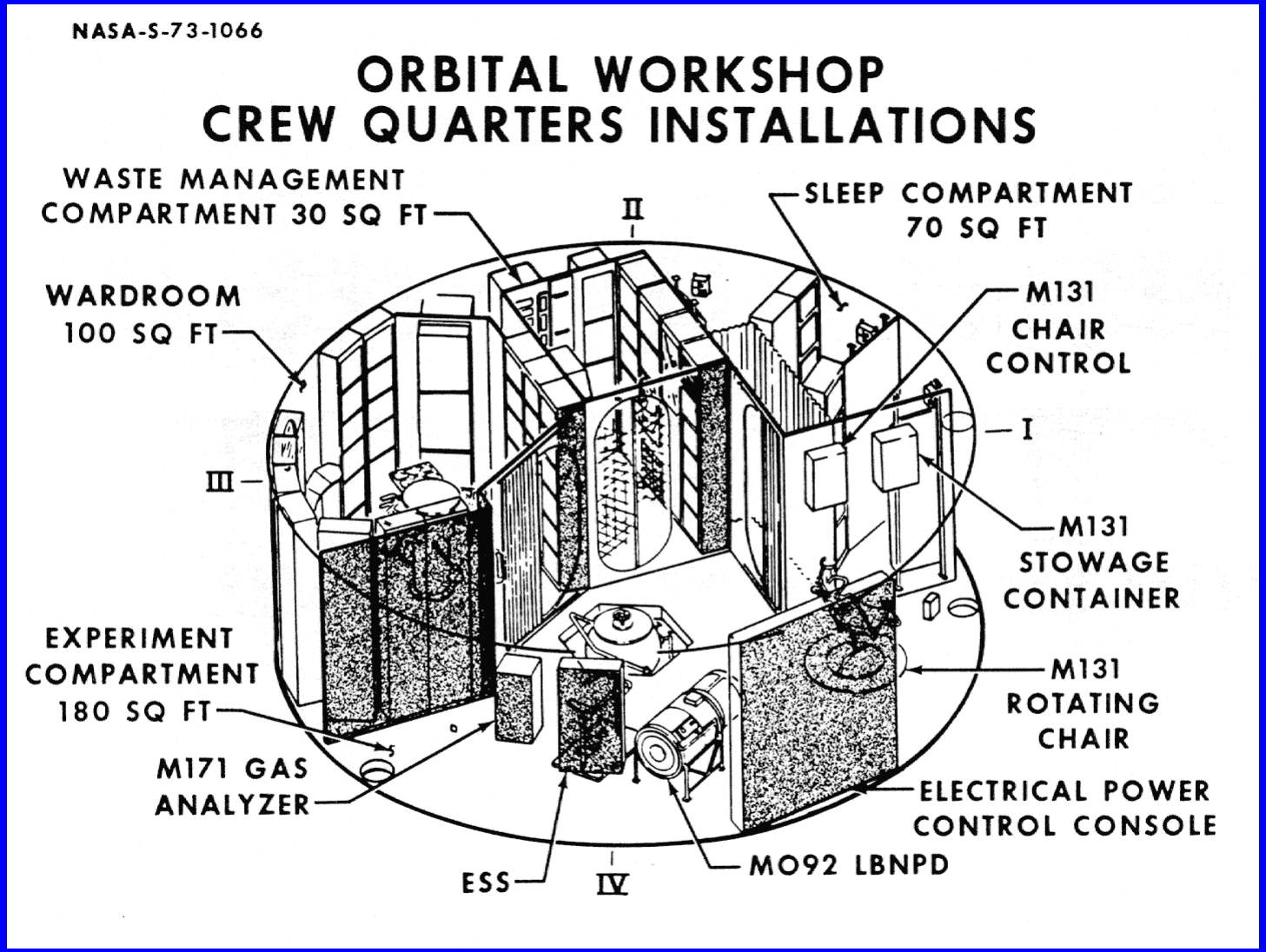

# Skylab Wardroom Layout

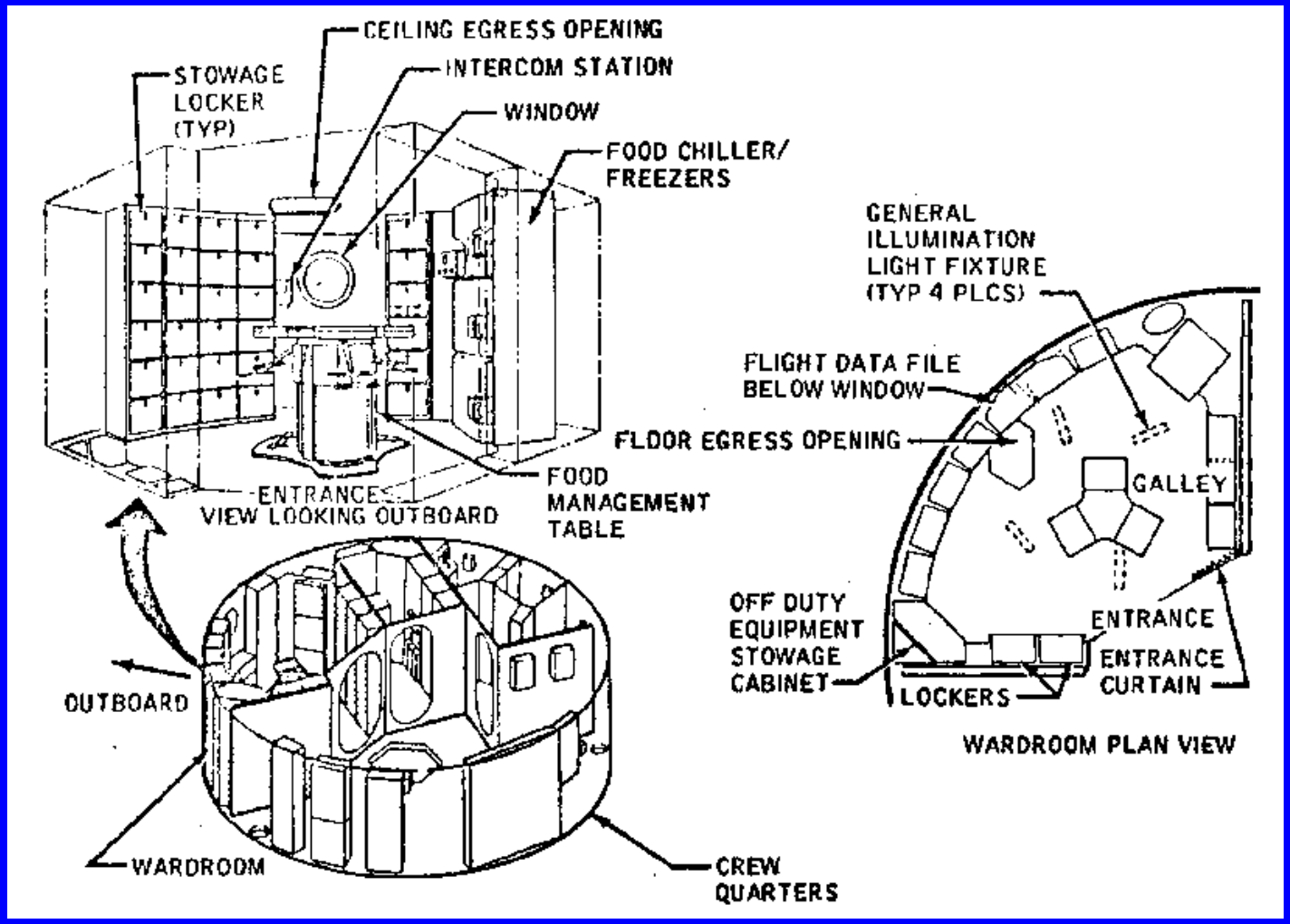


From *MSFC Skylab Crew Systems Mission Evaluation*, NASA TM X-64825, 1974

# Skylab Waste Management Compartment

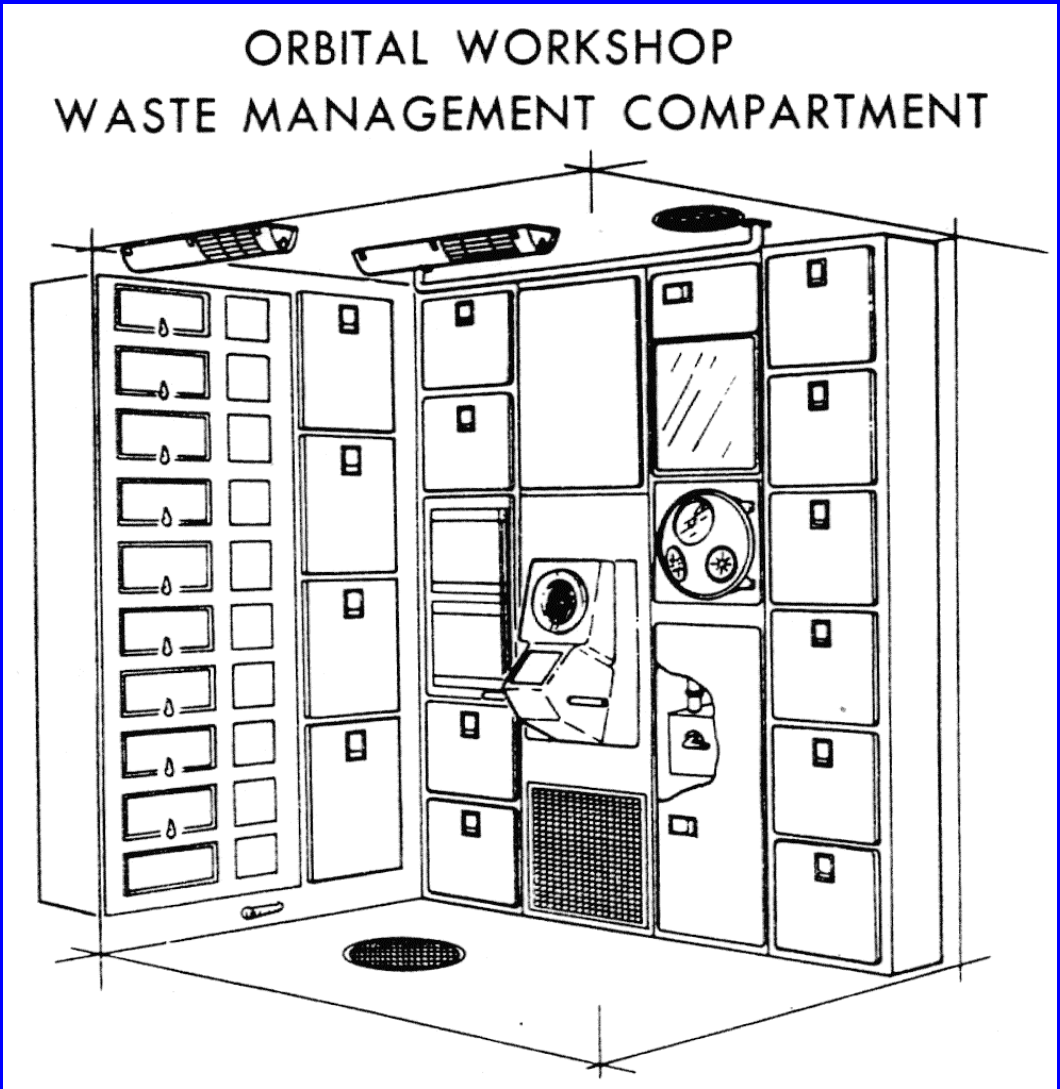

# Stowage

- Number of items stowed proportional to volume, crew size, duration, complexity of mission
  - Mercury: 48 items
  - Gemini: 196
  - Apollo: 1727
  - Shuttle: 2600
  - Skylab: 10,160
  - ISS: >20,000
- After you stow it, how do you find it?

# Psychosocial Issues

- Scheduling and planning
- Recreation
- Command structure
- Issues affecting crew morale
  - Environment
  - Food and drink
  - Exercise
  - Hygiene
  - Noise
  - Lighting

# International Space Station

# A Tour of ISS